USB7206

6-Port USB 3.2 Gen 2 Controller Hub

Highlights

- 6-Port USB Smart Hub with:
  - ®Five Standard USB 3.2 Gen 2 downstream ports
  - One Standard USB 2.0 downstream port
  - Internal Hub Feature Controller enables:
    -USB to I^2C/SPI/I^2S/GPIO bridge endpoint support
    -USB to internal hub register write and read
- USB Link Power Management (LPM) support
- Programming of firmware image to external SPI memory device from USB host
- USB-IF Battery Charger revision 1.2 support on downstream ports (DCP, CDP, SDP)
- Enhanced OEM configuration options available through either OTP or external SPI memory
- Available in 100-pin (12mm x 12mm) VQFN RoHS compliant package
- Commercial and industrial grade temperature support

Target Applications

- Standalone USB Hubs
- Laptop Docks
- PC Motherboards
- PC Monitor Docks
- Multi-function USB 3.2 Gen 2 Peripherals

Key Benefits

- USB 3.2 Gen 2 compliant 10 Gbps, 5 Gbps, 480 Mbps, 12 Mbps, and 1.5Mbps operation
  - 5V tolerant USB 2.0 pins
  - 1.21V tolerant USB 3.2 Gen 2 pins
  - Integrated termination and pull-up/down resistors
  -
- Supports battery charging of most popular battery powered devices on all ports
  - USB-IF Battery Charging rev. 1.2 support (DCP, CDP, SDP)
  - Apple® portable product charger emulation
  - Chinese YD/T 1591-2006/2009 charger emulation
  - European Union universal mobile charger support
  - Supports additional portable devices
- On-chip Microcontroller
  - manages I/Os, VBUS, and other signals
- 96kB RAM, 256kB ROM
- 8kB One-Time-Programmable (OTP) ROM
  - Includes on-chip charge pump
- Configuration programming via OTP Memory, SPI external memory, or SMBus
- **FlexConnect**
  - The roles of the upstream and all downstream ports are reversible on command
- **USB Bridging**
  - USB to I^2C, SPI, I^2S, and GPIO
- **PortSwap**
  - Configurable USB 2.0 differential pair signal swap
- **PHYBoost**
  - Programmable USB transceiver drive strength for recovering signal integrity
- **VariSense**
  - Programmable USB receive sensitivity
- **PortSplit**
  - USB 2.0 and USB 3.2 Gen 2 port operation can be split for custom applications using embedded USB 3.x devices in parallel with USB 2.0 devices
- Compatible with Microsoft Windows 10, 8, 7, XP, Apple OS X 10.4+, and Linux hub drivers
- Optimized for low-power operation and low thermal dissipation
- 100-pin VQFN package (12mm x 12mm)

© 2018 - 2020 Microchip Technology Inc.

TO OUR VALUED CUSTOMERS

It is our intention to provide our valued customers with the best documentation possible to ensure successful use of your Microchip products. To this end, we will continue to improve our publications to better suit your needs. Our publications will be refined and enhanced as new volumes and updates are introduced.

If you have any questions or comments regarding this publication, please contact the Marketing Communications Department via E-mail at **docerrors@microchip.com** or fax the **Reader Response Form** in the back of this data sheet to (480) 792-4150. We welcome your feedback.

Most Current Data Sheet

To obtain the most up-to-date version of this data sheet, please register at our Worldwide Web site at:

http://www.microchip.com

You can determine the version of a data sheet by examining its literature number found on the bottom outside corner of any page. The last character of the literature number is the version number, (e.g., DS30000A is version A of document DS30000).

Errata

An errata sheet, describing minor operational differences from the data sheet and recommended workarounds, may exist for current devices. As device/documentation issues become known to us, we will publish an errata sheet. The errata will specify the revision of silicon and revision of document to which it applies.

To determine if an errata sheet exists for a particular device, please check with one of the following:

- Microchip's Worldwide Web site; **http://www.microchip.com**
- Your local Microchip sales office (see last page)

When contacting a sales office, please specify which device, revision of silicon and data sheet (include literature number) you are using.

Customer Notification System

Register on our web site at **www.microchip.com** to receive the most current information on all of our products.

© 2018 - 2020 Microchip Technology Inc.

1.0 PREFACE

1.1 General Terms

TABLE 1-1: GENERAL TERMS

Term	Description
ADC	Analog-to-Digital Converter
Byte	8 bits
CDC	Communication Device Class
CSR	Control and Status Registers
DFP	Downstream Facing Port
DWORD	32 bits
EOP	End of Packet
EP	Endpoint
FIFO	First In First Out buffer
FS	Full-Speed
FSM	Finite State Machine
GPIO	General Purpose I/O
HS	Hi-Speed
HSOS	High Speed Over Sampling
Hub Feature Controller	The Hub Feature Controller, sometimes called a Hub Controller for short is the internal processor used to enable the unique features of the USB Controller Hub. This is not to be confused with the USB Hub Controller that is used to communicate the hub status back to the Host during a USB session.
I^2C	Inter-Integrated Circuit
LS	Low-Speed
lsb	Least Significant Bit
LSB	Least Significant Byte
msb	Most Significant Bit
MSB	Most Significant Byte
N/A	Not Applicable
NC	No Connect
OTP	One Time Programmable
PCB	Printed Circuit Board
PCS	Physical Coding Sublayer
PHY	Physical Layer
PLL	Phase Lock Loop
RESERVED	Refers to a reserved bit field or address. Unless otherwise noted, reserved bits must always be zero for write operations. Unless otherwise noted, values are not guaranteed when reading reserved bits. Unless otherwise noted, do not read or write to reserved addresses.
SDK	Software Development Kit
SMBus	System Management Bus
UFP	Upstream Facing Port
UUID	Universally Unique IDentifier
WORD	16 bits

1.2 Buffer Types

TABLE 1-2: BUFFER TYPES

Buffer Type	Description
I	Input.
IS	Input with Schmitt trigger.
O12	Output buffer with 12 mA sink and 12 mA source.
OD12	Open-drain output with 12 mA sink
PU	50 µA (typical) internal pull-up. Unless otherwise noted in the pin description, internal pull-ups are always enabled. Internal pull-up resistors prevent unconnected inputs from floating. Do not rely on internal resistors to drive signals external to the device. When connected to a load that must be pulled high, an external resistor must be added.
PD	50 µA (typical) internal pull-down. Unless otherwise noted in the pin description, internal pull-downs are always enabled. Internal pull-down resistors prevent unconnected inputs from floating. Do not rely on internal resistors to drive signals external to the device. When connected to a load that must be pulled low, an external resistor must be added.
ICLK	Crystal oscillator input pin
OCLK	Crystal oscillator output pin
I/O-U	Analog input/output defined in USB specification.
I-R	RBIAS.
A	Analog.
AIO	Analog bidirectional.
P	Power pin.

© 2018 - 2020 Microchip Technology Inc.

1.3 Pin Reset States

The pin reset state definitions are detailed in Table 1-3. Refer to Section 3.1, Pin Assignments for details on individual pin reset states.

TABLE 1-3: PIN RESET STATE LEGEND

Symbol	Description
AI	Analog input
AIO	Analog input/output
AO	Analog output
PD	Hardware enables pull-down
PU	Hardware enables pull-up
Y	Hardware enables function
Z	Hardware disables output driver (high impedance)
PU	Hardware enables internal pull-up
PD	Hardware enables internal pull-down

1.4 Reference Documents

1. *Universal Serial Bus Revision 3.2 Specification*, http://www.usb.org
2. *Battery Charging Specification*, Revision 1.2, Dec. 07, 2010, http://www.usb.org
3. *I^2C-Bus Specification*, Version 1.1, http://www.nxp.com/documents/user_manual/UM10204.pdf
4. *I^2S-Bus Specification*, http://www.sparkfun.com/datasheets/BreakoutBoards/I2SBUS.pdf
5. *System Management Bus Specification*, Version 1.0, http://smbus.org/specs

Note: Additional USB7206 resources can be found on the Microchip USB7206 product page at www.microchip.com/USB7206.

2.0 INTRODUCTION

2.1 General Description

The Microchip USB7206 hub is a low-power, OEM configurable, USB 3.2 Gen 2 hub controller with 6 downstream ports and advanced features for embedded USB applications. The USB7206 is fully compliant with the Universal Serial Bus Revision 3.2 Specification and USB 2.0 Link Power Management Addendum. The USB7206 supports 10 Gbps SuperSpeed+ (SS+), 5 Gbps SuperSpeed (SS), 480 Mbps Hi-Speed (HS), 12 Mbps Full-Speed (FS), and 1.5 Mbps Low-Speed (LS) USB downstream devices on five standard USB 3.2 Gen 2 downstream ports and only legacy speeds (HS/FS/LS) on one standard USB 2.0 downstream port.

The USB7206 supports the legacy USB speeds (HS/FS/LS) through a dedicated USB 2.0 hub controller that is the culmination of seven generations of Microchip hub feature controller design and experience with proven reliability, interoperability, and device compatibility. The SuperSpeed hub controller operates in parallel with the USB 2.0 controller, decoupling the 10/5 Gbps SS+/SS data transfers from bottlenecks due to the slower USB 2.0 traffic.

The USB7206 enables OEMs to configure their system using “Configuration Straps.” These straps simplify the configuration process assigning default values to USB 3.2 Gen 2 ports and GPIOs. OEMs can disable ports, enable battery charging and define GPIO functions as default assignments on power up removing the need for OTP or external SPI ROM.

The USB7206 supports downstream battery charging. The USB7206 integrated battery charger detection circuitry supports the USB-IF Battery Charging (BC1.2) detection method and most Apple devices. The USB7206 provides the battery charging handshake and supports the following USB-IF BC1.2 charging profiles:

• DCP: Dedicated Charging Port (Power brick with no data)

• CDP: Charging Downstream Port (1.5A with data)

• SDP: Standard Downstream Port (0.5A[USB 2.0]/0.9A[USB 3.2] with data)

Additionally, the USB7206 includes many powerful and unique features such as:

The Hub Feature Controller, an internal USB device dedicated for use as a USB to I^2C/SPI/GPIO interface that allows external circuits or devices to be monitored, controlled, or configured via the USB interface.

FlexConnect, which provides flexible connectivity options. One of the USB7206’s downstream ports can be reconfigured to become the upstream port, allowing master capable devices to control other devices on the hub.

PortSwap, which adds per-port programmability to USB differential-pair pin locations. PortSwap allows direct alignment of USB signals (D+/D-) to connectors to avoid uneven trace length or crossing of the USB differential signals on the PCB.

PHYBoost, which provides programmable levels of Hi-Speed USB signal drive strength in the downstream port transceivers. PHYBoost attempts to restore USB signal integrity in a compromised system environment. The graphic on the right shows an example of Hi-Speed USB eye diagrams before and after PHYBoost signal integrity restoration. in a compromised system environment.

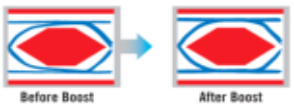

VariSense, which controls the Hi-Speed USB receiver sensitivity enabling programmable levels of USB signal receive sensitivity. This capability allows operation in a sub-optimal system environment, such as when a captive USB cable is used.

Port Split, which allows for the USB 3.2 Gen 2 and USB 2.0 portions of downstream ports 3, 4, and 5 to operate independently and enumerate two separate devices in parallel in special applications.

© 2018 - 2020 Microchip Technology Inc.

The USB7206 can be configured for operation through internal default settings. Custom OEM configurations are supported through external SPI ROM or OTP ROM. All port control signal pins are under firmware control in order to allow for maximum operational flexibility and are available as GPIOs for customer specific use.

The USB7206 is available in commercial (0°C to +70°C) and industrial (-40°C to +85°C) temperature ranges. An internal block diagram of the USB7206 in an upstream Type-B application is shown in Figure 2-1.

FIGURE 2-1: USB7206 INTERNAL BLOCK DIAGRAM - UPSTREAM TYPE-B APPLICATION

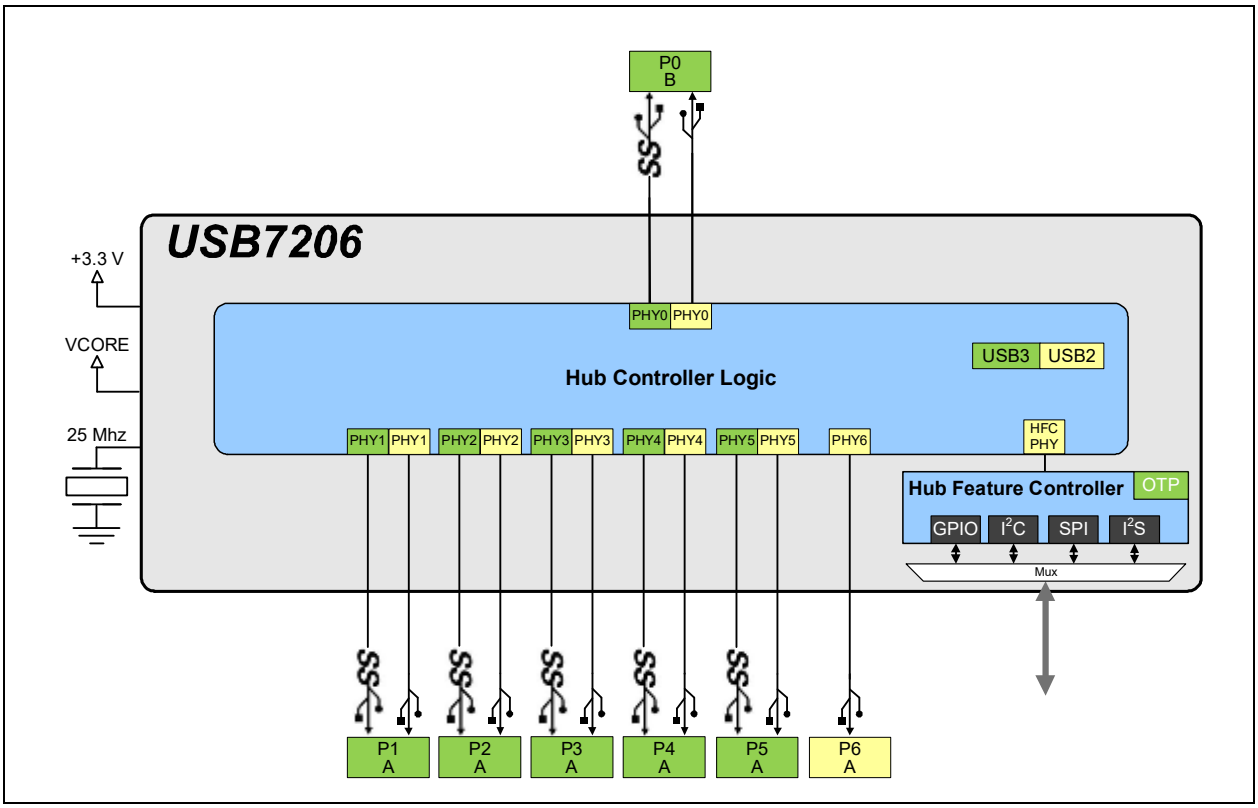

Note: All port numbering in this document is LOGICAL port numbering with the device in the default configuration. LOGICAL port numbering is the numbering as communicated to the USB host. It is the end result after any port number remapping or port disabling. The PHYSICAL port number is the port number with respect to the physical PHY on the chip. PHYSICAL port numbering is fixed and the settings are not impacted by LOGICAL port renumbering/remapping. Certain port settings are made with respect to LOGICAL port numbering, and other port settings are made with respect to PHYSICAL port numbering. Refer to the “Configuration of USB7202/USB7206/USB725x” application note for details on the LOGICAL vs. PHYSICAL mapping and additional configuration details.

3.0 PIN DESCRIPTIONS

3.1 Pin Assignments

FIGURE 3-1: USB7206 100-VQFN PIN ASSIGNMENTS

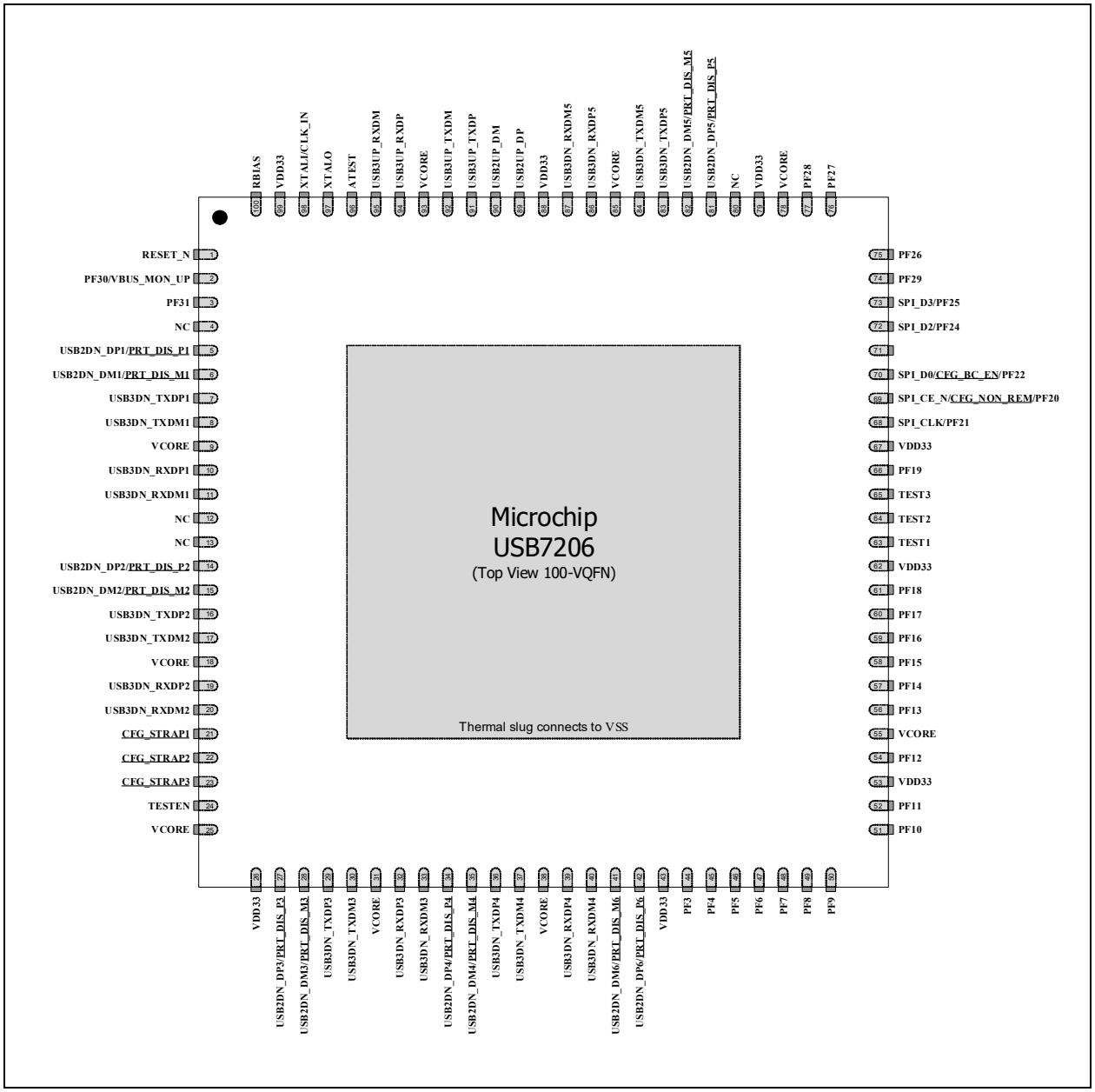

Note: Configuration straps are identified by an underlined symbol name. Signals that function as configuration straps must be augmented with an external resistor when connected to a load.

© 2018 - 2020 Microchip Technology Inc.

Pin Num	Pin Name	Reset	Pin Num	Pin Name	Reset
1	RESET_N	Z	51	PF10	PD
2	PF30/VBUS_MON_UP	Z	52	PF11	PD
3	PF31	Z	53	VDD33	Z
4	NC	AI	54	PF12	PD
5	USB2DN_DP1/PRT_DIS_P1	AIO PD	55	VCORE	Z
6	USB2DN_DM1/PRT_DIS_M1	AIO PD	56	PF13	PD
7	USB3DN_TXDP1	AO PD	57	PF14	PD
8	USB3DN_TXDM1	AO PD	58	PF15	PD
9	VCORE	Z	59	PF16	PD
10	USB3DN_RXDP1	AI PD	60	PF17	PD
11	USB3DN_RXDM1	AI PD	61	PF18	Z
12	NC	AI	62	VDD33	Z
13	NC	AI	63	TEST1	Z
14	USB2DN_DP2/PRT_DIS_P2	AIO PD	64	TEST2	Z
15	USB2DN_DM2/PRT_DIS_M2	AIO PD	65	TEST3	Z
16	USB3DN_TXDP2	AO PD	66	PF19	Z
17	USB3DN_TXDM2	AO PD	67	VDD33	Z
18	VCORE	Z	68	SPI_CLK/PF21	Z
19	USB3DN_RXDP2	AI PD	69	SPI_CE_N/CFG_NON_REM/PF20	PU
20	USB3DN_RXDM2	AI PD	70	SPI_D0/CFG_BC_EN/PF22	Z
21	CFG_STRAP1	Z	71	SPI_D1/PF23	Z
22	CFG_STRAP2	Z	72	SPI_D2/PF24	Z
23	CFG_STRAP3	Z	73	SPI_D3/PF25	Z
24	TESTEN	Z	74	PF29	Z
25	VCORE	Z	75	PF26	Z
26	VDD33	Z	76	PF27	Z
27	USB2DN_DP3/PRT_DIS_P3	AIO PD	77	PF28	Z
28	USB2DN_DM3/PRT_DIS_M3	AIO PD	78	VCORE	Z
29	USB3DN_TXDP3	AO PD	79	VDD33	Z
30	USB3DN_TXDM3	AO PD	80	NC	AI
31	VCORE	Z	81	USB2DN_DP5/PRT_DIS_P5	AIO PD
32	USB3DN_RXDP3	AI PD	82	USB2DN_DM5/PRT_DIS_M5	AIO PD
33	USB3DN_RXDM3	AI PD	83	USB3DN_TXDP5	AO PD
34	USB2DN_DP4/PRT_DIS_P4	AIO PD	84	USB3DN_TXDM5	AO PD
35	USB2DN_DM4/PRT_DIS_M4	AIO PD	85	VCORE	Z
36	USB3DN_TXDP4	AO PD	86	USB3DN_RXDP5	AI PD
37	USB3DN_TXDM4	AO PD	87	USB3DN_RXDM5	AI PD
38	VCORE	Z	88	VDD33	Z
39	USB3DN_RXDP4	AI PD	89	USB2UP_DP	AIO Z
40	USB3DN_RXDM4	AI PD	90	USB2UP_DM	AIO Z
41	USB2DN_DM6/PRT_DIS_M6	AIO PD	91	USB3UP_TXDP	AO PD
42	USB2DN_DP6/PRT_DIS_P6	AIO PD	92	USB3UP_TXDM	AO PD
43	VDD33	Z	93	VCORE	Z
44	PF3	Z	94	USB3UP_RXDP	AI PD
45	PF4	Z	95	USB3UP_RXDM	AI PD
46	PF5	Z	96	ATEST	AO
47	PF6	Z	97	XTALO	AO
48	PF7	Z	98	XTALI/CLK_IN	AI
49	PF8	Z	99	VDD33	Z
50	PF9	Z	100	RBIAS	AI
Exposed Pad (VSS) must be connected to ground.					

3.2 Pin Descriptions

This section contains descriptions of the various USB7206 pins. The "_N" symbol in the signal name indicates that the active, or asserted, state occurs when the signal is at a low voltage level. For example, **RESET_N** indicates that the reset signal is active low. When "_N" is not present after the signal name, the signal is asserted when at the high voltage level.

The terms assertion and negation are used exclusively. This is done to avoid confusion when working with a mixture of "active low" and "active high" signal. The term assert, or assertion, indicates that a signal is active, independent of whether that level is represented by a high or low voltage. The term negate, or negation, indicates that a signal is inactive.

The "If Unused" column provides information on how to terminate pins if they are unused in a customer design.

Buffer type definitions are detailed in Section 1.2, Buffer Types.

TABLE 3-1: PIN DESCRIPTIONS

Name	Symbol	Buffer Type	Description	If Unused
USB 3.2 Gen 2 Interfaces				
Upstream USB 3.2 Gen 2 TX D+	**USB3UP_TXDP**	I/O-U	Upstream USB 3.2 Gen 2 Transmit Data Plus.	Float
Upstream USB 3.2 Gen 2 TX D-	**USB3UP_TXDM**	I/O-U	Upstream USB 3.2 Gen 2 Transmit Data Minus.	Float
Upstream USB 3.2 Gen 2 RX D+	**USB3UP_RXDP**	I/O-U	Upstream USB 3.2 Gen 2 Receive Data Plus.	Weak pull-down to GND
Upstream USB 3.2 Gen 2 RX D-	**USB3UP_RXDM**	I/O-U	Upstream USB 3.2 Gen 2 Receive Data Minus.	Weak pull-down to GND
Downstream Ports 1-5 USB 3.2 Gen 2 TX D+	**USB3DN_TXDP[1:5]**	I/O-U	Downstream SuperSpeed+ Transmit Data Plus, ports 1 through 5.	Float
Downstream Ports 1-5 USB 3.2 Gen 2 TX D-	**USB3DN_TXDM[1:5]**	I/O-U	Downstream SuperSpeed+ Transmit Data Minus, ports 1 through 5.	Float
Downstream Ports 1-5 USB 3.2 Gen 2 RX D+	**USB3DN_RXDP[1:5]**	I/O-U	Downstream SuperSpeed+ Receive Data Plus, ports 1 through 5.	Weak pull-down to GND
Downstream Ports 1-5 USB 3.2 Gen 2 RX D-	**USB3DN_RXDM[1:5]**	I/O-U	Downstream SuperSpeed+ Receive Data Minus, ports 1 through 5.	Weak pull-down to GND
USB 2.0 Interfaces				
Upstream USB 2.0 D+	**USB2UP_DP**	I/O-U	Upstream USB 2.0 Data Plus (D+).	Mandatory Note 3-6
Upstream USB 2.0 D-	**USB2UP_DM**	I/O-U	Upstream USB 2.0 Data Minus (D-).	Mandatory Note 3-6
Downstream Ports 1-6 USB 2.0 D+	**USB2DN_DP[1:6]**	I/O-U	Downstream USB 2.0 Ports 1-6 Data Plus (D+).	Connect directly to 3.3V

© 2018 - 2020 Microchip Technology Inc.

TABLE 3-1: PIN DESCRIPTIONS (CONTINUED)

Name	Symbol	Buffer Type	Description	If Unused
Downstream Ports 1-6 USB 2.0 D-	**USB2DN_DM[1:6]**	I/O-U	Downstream USB 2.0 Ports 1-6 Data Minus (D-)	Connect directly to 3.3V
VBUS Detect	**VBUS_MON_UP**	IS	This signal detects the state of the upstream bus power. Externally, VBUS can be as high as 5.25 V, which can be damaging to this pin. The amplitude of VBUS must be reduced by a voltage divider. The recommended voltage divider is shown below. 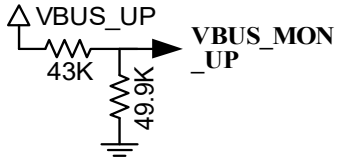 For self-powered applications with a permanently attached host, this pin must be connected to either 3.3 V or 5.0 V through a resistor divider to provide 3.3 V. In embedded applications, **VBUS_MON_UP** may be controlled (toggled) when the host desires to renegotiate a connection without requiring a full reset of the device.	Not Recommended. If unused, tie to a 3.3V rail through a 10-100k pull-up resistor.
SPI Interface				
SPI Clock	**SPI_CLK**	I/O-U	SPI clock. If the SPI interface is enabled, this pin must be driven low during reset.	Weak pull-down to GND
SPI Data 3-0	**SPI_D[3:0]**	I/O-U	SPI Data 3-0. If the SPI interface is enabled, these signals function as Data 3 through 0. **Note 3-1** **SPI_D0** operates as the **CFG_BC_EN** strap if external SPI memory is not used. It must be terminated with the selected strap resistor to 3.3V or GND. **SPI_D[1:3]** should be connected to GND through a weak pull-down.	Note 3-1
SPI Chip Enable	**SPI_CE_N**	I/O12	Active low SPI chip enable input. If the SPI interface is enabled, this pin must be driven high in powerdown states. **Note 3-2** Operates as the **CFG_NON_REM** strap if external SPI memory is not used. It must be terminated with the selected strap resistor to 3.3V or GND.	Note 3-2

TABLE 3-1: PIN DESCRIPTIONS (CONTINUED)

Name	Symbol	Buffer Type	Description	If Unused
Miscellaneous				
Programmable Function Pins	**PF[31:3]**	I/O12	Programmable function pins. **Note 3-3** If unused: depends on the configured pin function. Refer to Section 3.3.4, PF[31:3] Configuration (CFG_STRAP[2:1])	Note 3-3
Test 1	**TEST1**	A	Test 1 pin. This signal is used for test purposes and must always be pulled-up to 3.3V via a 10 kΩ resistor.	Pull to 3.3V through a 10 kΩ resistor
Test 2	**TEST2**	A	Test 2 pin. This signal is used for test purposes and must always be pulled-up to 3.3V via a 10 kΩ resistor.	Pull to 3.3V through a 10 kΩ resistor
Test 3	**TEST3**	A	Test 3 pin. This signal is used for test purposes and must always be pulled-up to 3.3V via a 10 kΩ resistor.	Pull to 3.3V through a 10 kΩ resistor
Reset Input	**RESET_N**	IS	This active low signal is used by the system to reset the device.	Mandatory Note 3-6
Bias Resistor	**RBIAS**	I-R	A 12.0 kΩ ±1.0% resistor is attached from ground to this pin to set the transceiver's internal bias settings. Place the resistor as close the device as possible with a dedicated, low impedance connection to the ground plane.	Mandatory Note 3-6
Test	**TESTEN**	I/O12	Test pin. This signal is used for test purposes and must always be connected to ground.	Connect to GND
Analog Test	**ATEST**	A	Analog test pin. This signal is used for test purposes and must always be left unconnected.	Float
External 25 MHz Crystal Input	**XTALI**	ICLK	External 25 MHz crystal input	Mandatory Note 3-6
External 25 MHz Reference Clock Input	**CLK_IN**	ICLK	External reference clock input. The device may alternatively be driven by a single-ended clock oscillator. When this method is used, **XTALO** should be left unconnected.	Mandatory Note 3-6

© 2018 - 2020 Microchip Technology Inc.

TABLE 3-1: PIN DESCRIPTIONS (CONTINUED)

Name	Symbol	Buffer Type	Description	If Unused
External 25 MHz Crystal Output	XTALO	OCLK	External 25 MHz crystal output	Float (only if single-ended clock is connected to CLK_IN)
No Connect	NC	-	No connect. For proper operation, this pin must be left unconnected.	No connect
Configuration Straps				
Port 6-1 D+ Disable Configuration Strap	PRT_DIS_P[6:1]	I	Port 6-1 D+ Disable Configuration Strap. These configuration straps are used in conjunction with the corresponding PRT_DIS_M[6:1] straps to disable the related port (6-1). See Note 3-7. Both USB data pins for the corresponding port must be tied to 3.3V to disable the associated downstream port.	N/A
Port 6-1 D- Disable Configuration Strap	PRT_DIS_M[6:1]	I	Port 6-1 D- Disable Configuration Strap. These configuration straps are used in conjunction with the corresponding PRT_DIS_P[6:1] straps to disable the related port (6-1). See Note 3-7. Both USB data pins for the corresponding port must be tied to 3.3V to disable the associated downstream port.	Mandatory Note 3-6
Non-Removable Ports Configuration Strap	CFG_NON_REM	I	Non-Removable Ports Configuration Strap. This configuration strap controls the number of reported non-removable ports. See Note 3-7 . **Note 3-4** Mandatory if external SPI memory is not used for firmware execution. If external SPI memory is used for firmware execution, then configuration strap resistor should be omitted.	Note 3-4

TABLE 3-1: PIN DESCRIPTIONS (CONTINUED)

Name	Symbol	Buffer Type	Description	If Unused
Battery Charging Configuration Strap	CFG_BC_EN	I/O12	Battery Charging Configuration Strap. This configuration strap controls the number of BC 1.2 enabled downstream ports. See Note 3-7. **Note 3-5** Mandatory if external SPI memory is not used for firmware execution. If external SPI memory is used for firmware execution, then configuration strap resistor should be omitted.	Mandatory Note 3-6
Device Mode Configuration Straps 3-1	CFG_STRAP[3:1]	I	Device Mode Configuration Straps 3-1. These configuration straps are used to select the device's mode of operation. See Note 3-7.	Mandatory Note 3-6
Power/Ground				
+3.3V I/O Power Supply Input	VDD33	P	+3.3 V power and internal regulator input.	Mandatory Note 3-6
Digital Core Power Supply Input	VCORE	P	Digital core power supply input.	Mandatory Note 3-6
Ground	VSS	P	Common ground. This exposed pad must be connected to the ground plane with a via array.	Mandatory Note 3-6

Note 3-6 Configuration strap values are latched on Power-On Reset (POR) and the rising edge of RESET_N (external chip reset). Configuration straps are identified by an underlined symbol name. Signals that function as configuration straps must be augmented with an external resistor when connected to a load. For additional information, refer to Section 3.3, Configuration Straps and Programmable Functions.

Note 3-7 Pin use is mandatory. Cannot be left unused.

© 2018 - 2020 Microchip Technology Inc.

3.3 Configuration Straps and Programmable Functions

Configuration straps are multi-function pins that are used during Power-On Reset (POR) or external chip reset (**RESET_N**) to determine the default configuration of a particular feature. The state of the signal is latched following deassertion of the reset. Configuration straps are identified by an underlined symbol name. This section details the various device configuration straps and associated programmable pin functions.

Note:	The system designer must guarantee that configuration straps meet the timing requirements specified in Section 9.6.2, Power-On and Configuration Strap Timing and Section 9.6.3, Reset and Configuration Strap Timing. If configuration straps are not at the correct voltage level prior to being latched, the device may capture incorrect strap values.

3.3.1 PORT DISABLE CONFIGURATION (PRT_DIS_P[6:1] / PRT_DIS_M[6:1])

The **PRT_DIS_P[6:1]** / **PRT_DIS_M[6:1]** configuration straps are used in conjunction to disable the related port (6-1)

For **PRT_DIS_P*x*** (where *x* is the corresponding port 6-1):

0 = Port *x* D+ Enabled

1 = Port *x* D+ Disabled

For **PRT_DIS_M*x*** (where *x* is the corresponding port 6-1):

0 = Port *x* D- Enabled

1 = Port *x* D- Disabled

Note:	Both **PRT_DIS_P*x*** and **PRT_DIS_M*x*** (where ***x*** is the corresponding port) must be tied to 3.3 V to disable the associated downstream port. Disabling the USB 2.0 port will also disable the corresponding USB 3.0 port.

3.3.2 NON-REMOVABLE PORT CONFIGURATION (CFG_NON_REM)

The **CFG_NON_REM** configuration strap is used to configure the non-removable port settings of the device to one of six settings. These modes are selected by the configuration of an external resistor on the **CFG_NON_REM** pin. The resistor options are a 200 kΩ pull-down, 200 kΩ pull-up, 10 kΩ pull-down, 10 kΩ pull-up, 10 Ω pull-down, and 10 Ω pull-up, as shown in Table 3-2.

TABLE 3-2: CFG_NON_REM RESISTOR ENCODING

CFG_NON_REM Resistor Value	**Setting**
200 kΩ Pull-Down	All ports removable
200 kΩ Pull-Up	Port 1 non-removable
10 kΩ Pull-Down	Ports 1, 2 non-removable
10 kΩ Pull-Up	Ports 1, 2, 3 non-removable
10 Ω Pull-Down	Ports 1, 2, 3, 4 non-removable
10 Ω Pull-Up	Ports 1, 2, 3, 4, 5, 6 non-removable

3.3.3 BATTERY CHARGING CONFIGURATION (CFG_BC_EN)

The **CFG_BC_EN** configuration strap is used to configure the battery charging port settings of the device to one of six settings. These modes are selected by the configuration of an external resistor on the **CFG_BC_EN** pin. The resistor options are a 200 kΩ pull-down, 200 kΩ pull-up, 10 kΩ pull-down, 10 kΩ pull-up, 10 Ω pull-down, and 10 Ω pull-up, as shown in Table 3-3.

TABLE 3-3: CFG_BC_EN RESISTOR ENCODING

CFG_BC_EN Resistor Value	Setting
200 kΩ Pull-Down	Battery charging not enable on any port
200 kΩ Pull-Up	BC1.2 DCP and CDP battery charging enabled on Port 1
10 kΩ Pull-Down	BC1.2 DCP and CDP battery charging enabled on Ports 1, 2
10 kΩ Pull-Up	BC1.2 DCP and CDP battery charging enabled on Ports 1, 2, 3
10 Ω Pull-Down	BC1.2 DCP and CDP battery charging enabled on Ports 1, 2, 3, 4
10 Ω Pull-Up	BC1.2 DCP and CDP battery charging enabled on Ports 1, 2, 3, 4, 5, 6

3.3.4 PF[31:3] CONFIGURATION (CFG_STRAP[2:1])

The USB7206 provides 29 programmable function pins (**PF[31:3]**). These pins can only be configured to 1 predefined configuration via the **CFG_STRAP[2:1]** pins. This configuration is selected via external resistors on the **CFG_STRAP[2:1]** pins, as detailed in Table 3-4. Resistor values and combinations not detailed in Table 3-4 are reserved and should not be used.

Note: **CFG_STRAP3** is not used and must be pulled-down to ground via a 200 kΩ resistor.

TABLE 3-4: CFG_STRAP[2:1] RESISTOR ENCODING

Mode	CFG_STRAP2 Resistor Value	CFG_STRAP1 Resistor Value
Configuration 3	200 kΩ Pull-Down	10 kΩ Pull-Down

Note: Configurations 1 and 2 are not used in the USB7206.

A summary of the configuration pin assignments is provided in Table 3-5. For details on behavior of each programmable function, refer to Table 3-6.

© 2018 - 2020 Microchip Technology Inc.

TABLE 3-5: PF[31:3] FUNCTION ASSIGNMENT

Pin	Configuration 3
PF3	I2S_SDI
PF4	I2S_SDO
PF5	I2S_SCK
PF6	I2S_LRCK
PF7	I2S_MCLK
PF8	NC
PF9	NC
PF10	PRT_CTL3_U3
PF11	PRT_CTL4_U3
PF12	PRT_CTL5_U3
PF13	PRT_CTL5
PF14	PRT_CTL4
PF15	PRT_CTL3
PF16	PRT_CTL2
PF17	PRT_CTL1
PF18	MSTR_I2C_CLK
PF19	MIC_DET
PF20	SPI_CE_N
PF21	SPI_CLK
PF22	SPI_D0
PF23	SPI_D1
PF24	SPI_D2
PF25	SPI_D3
PF26	SLV_I2C_CLK
PF27	SLV_I2C_DATA
PF28	PRT_CTL6
PF29	(Note 3-1)
PF30	VBUS_DET
PF31	MSTR_I2C_DATA

Note 3-1 The default function is not used in the USB7206.

Note: The default **PF*x*** pin functions can be overridden with additional configuration by modification of the pin mux registers. These changes can be made during the SMBus configuration stage, by programming to OTP memory, or during runtime (after hub has attached and enumerated) by register writes via the SMBus slave interface or USB commands to the internal Hub Feature Controller Device.

TABLE 3-6: PROGRAMMABLE FUNCTIONS DESCRIPTIONS

Function	Buffer Type	Description	If Unused
Master SMBus/I²C Interface			
MSTR_I2C_CLK	I/O12	Bridging Master SMBus/I²C controller clock (SMBus/I²C controller 1). External 1k-10k pull-up resistors to 3.3V are required if the I²C Master Interface is to be used.	Weak pull-down to GND
MSTR_I2C_DATA	I/O12	Bridging Master SMBus/I²C controller data (SMBus/I²C controller 1). External 1k-10k pull-up resistors to 3.3V are required if the I²C Master Interface is to be used.	Weak pull-down to GND
Slave SMBus/I²C Interface			
SLV_I2C_CLK	I/O12	Slave SMBus/I²C controller clock (SMBus/I²C controller 2). External 1k-10k pull-up resistors to 3.3V are required if the I²C Slave Interface is to be used.	Weak pull-down to GND
SLV_I2C_DATA	I/O12	Slave SMBus/I²C controller data (SMBus/I²C controller 2). External 1k-10k pull-up resistors to 3.3V are required if the I²C Slave Interface is to be used.	Weak pull-down to GND
I²S Interface			
I2S_SDI	I	I²S Serial Data In	Weak pull-down to GND
I2S_SDO	O12	I²S Serial Data Out	Weak pull-down to GND
I2S_SCK	O12	I²S Continuous Serial Clock	Weak pull-down to GND
I2S_LRCK	O12	I²S Word Select / Left-Right Clock	Weak pull-down to GND
I2S_MCLK	O12	I²S Master Clock	Weak pull-down to GND
MIC_DET	I	I²S Microphone Plug Detect 0 = No microphone plugged into the audio jack 1 = Microphone plugged into the audio jack	Weak pull-down to GND

© 2018 - 2020 Microchip Technology Inc.

TABLE 3-6: PROGRAMMABLE FUNCTIONS DESCRIPTIONS (CONTINUED)

Function	Buffer Type	Description	If Unused
Miscellaneous			
PRT_CTL6	I/O12 (PU)	Port 6 power enable / overcurrent sense When the downstream port is enabled, this pin is set as an input with an internal pull-up resistor applied. The internal pull-up enables power to the downstream port while the pin monitors for an active low overcurrent signal assertion from an external current monitor on USB port 6. This pin will change to an output and be driven low when the port is disabled by configuration or by the host control. **Note:** This signal controls both the USB 2.0 and USB 3.2 portions of the port. **Note 3-1** This pin can be left unused only if Port 6 is disabled via strap/OTP/SMBus/SPI configuration.	Float (Note 3-1)
PRT_CTL5	I/O12 (PU)	Port 5 power enable / overcurrent sense When the downstream port is enabled, this pin is set as an input with an internal pull-up resistor applied. The internal pull-up enables power to the downstream port while the pin monitors for an active low overcurrent signal assertion from an external current monitor on USB port 5. This pin will change to an output and be driven low when the port is disabled by configuration or by the host control. **Note:** When PortSplit is disabled, this signal controls both the USB 2.0 and USB 3.2 portions of the port. When PortSplit is enabled, this signal controls the USB 2.0 portion of the port only. **Note 3-2** This pin can be left unused only if Port 5 is disabled via strap/OTP/SMBus/SPI configuration.	Float (Note 3-2)
PRT_CTL4	I/O12 (PU)	Port 4 power enable / overcurrent sense When the downstream port is enabled, this pin is set as an input with an internal pull-up resistor applied. The internal pull-up enables power to the downstream port while the pin monitors for an active low overcurrent signal assertion from an external current monitor on USB port 4. This pin will change to an output and be driven low when the port is disabled by configuration or by the host control. **Note:** When PortSplit is disabled, this signal controls both the USB 2.0 and USB 3.2 portions of the port. When PortSplit is enabled, this signal controls the USB 2.0 portion of the port only. **Note 3-3** This pin can be left unused only if Port 4 is disabled via strap/OTP/SMBus/SPI configuration.	Float (Note 3-3)

TABLE 3-6: PROGRAMMABLE FUNCTIONS DESCRIPTIONS (CONTINUED)

Function	Buffer Type	Description	If Unused
PRT_CTL3	I/O12 (PU)	Port 3 power enable / overcurrent sense When the downstream port is enabled, this pin is set as an input with an internal pull-up resistor applied. The internal pull-up enables power to the downstream port while the pin monitors for an active low overcurrent signal assertion from an external current monitor on USB port 3. This pin will change to an output and be driven low when the port is disabled by configuration or by the host control. **Note:** When PortSplit is disabled, this signal controls both the USB 2.0 and USB 3.2 portions of the port. When PortSplit is enabled, this signal controls the USB 2.0 portion of the port only. **Note 3-4** This pin can be left unused only if Port 3 is disabled via strap/OTP/SMBus/SPI configuration.	Float (Note 3-4)
PRT_CTL2	I/O12 (PU)	Port 2 power enable / overcurrent sense When the downstream port is enabled, this pin is set as an input with an internal pull-up resistor applied. The internal pull-up enables power to the downstream port while the pin monitors for an active low overcurrent signal assertion from an external current monitor on USB port 2. This pin will change to an output and be driven low when the port is disabled by configuration or by the host control. **Note:** When PortSplit is disabled, this signal controls both the USB 2.0 and USB 3.2 portions of the port. When PortSplit is enabled, this signal controls the USB 2.0 portion of the port only. **Note 3-5** This pin can be left unused only if Port 2 is disabled via strap/OTP/SMBus/SPI configuration.	Float (Note 3-1)
PRT_CTL1	I/O12 (PU)	Port 1 power enable / overcurrent sense When the downstream port is enabled, this pin is set as an input with an internal pull-up resistor applied. The internal pull-up enables power to the downstream port while the pin monitors for an active low overcurrent signal assertion from an external current monitor on USB port 1. This pin will change to an output and be driven low when the port is disabled by configuration or by the host control. **Note:** When PortSplit is disabled, this signal controls both the USB 2.0 and USB 3.2 portions of the port. When PortSplit is enabled, this signal controls the USB 2.0 portion of the port only. **Note 3-6** This pin can be left unused only if Port 1 is disabled via strap/OTP/SMBus/SPI configuration.	Float (Note 3-1)

© 2018 - 2020 Microchip Technology Inc.

TABLE 3-6: PROGRAMMABLE FUNCTIONS DESCRIPTIONS (CONTINUED)

Function	Buffer Type	Description	If Unused
PRT_CTL5_U3	O12	Port 5 USB 3.2 PortSplit power enable This signal is an active high control signal used to enable to the USB 3.2 portion of the downstream port 5 when PortSplit is enabled. When PortSplit is disabled, this pin is not used. **Note:** This signal should only be used to control an embedded USB 3.2 device.	Float
PRT_CTL4_U3	O12	Port 4 USB 3.2 PortSplit power enable This signal is an active high control signal used to enable to the USB 3.2 portion of the downstream port 4 when PortSplit is enabled. When PortSplit is disabled, this pin is not used. **Note:** This signal should only be used to control an embedded USB 3.2 device.	Float
PRT_CTL3_U3	O12	Port 3 USB 3.2 PortSplit power enable This signal is an active high control signal used to enable to the USB 3.2 portion of the downstream port 3 when PortSplit is enabled. When PortSplit is disabled, this pin is not used. **Note:** This signal should only be used to control an embedded USB 3.2 device.	Float

3.4 Physical and Logical Port Mapping

The USB72xx family of devices are based upon a common architecture, but all have different modifications and/or pin bond outs to achieve the various device configurations. The base chip is composed of a total of 6 USB3 PHYs and 7 USB2 PHYs. These PHYs are physically arranged on the chip in a certain way, which is referred to as the PHYSICAL port mapping.

The actual port numbering is remapped by default in different ways on each device in the family. This changes the way that the ports are numbered from the USB host's perspective. This is referred to as LOGICAL mapping.

The various configuration options available for these devices may, at times, be with respect to PHYSICAL mapping or LOGICAL mapping. Each individual configuration option which has a PHYSICAL or LOGICAL dependency is declared as such within the register description.

The PHYSICAL vs. LOGICAL mapping is described for all port related pins in Table 3-7. A system design in schematics and layout is generally performed using the pinout in Section 3.1, Pin Assignments, which is assigned by the default LOGICAL mapping. Hence, it may be necessary to cross reference the PHYSICAL vs. LOGICAL look up tables when determining the hub configuration.

Note: The MPLAB Connect tool makes configuration simple; the settings can be selected by the user with respect to the LOGICAL port numbering. The tool handles the necessary linking to the PHYSICAL port settings. Refer to Section 6.0, Device Configuration for additional information.

TABLE 3-7: USB7206 PHYSICAL VS. LOGICAL PORT MAPPING

Device Pin	Pin Name (as in datasheet)	LOGICAL PORT NUMBER							PHYSICAL PORT NUMBER						
		0	1	2	3	4	5	6	0	1	2	3	4	5	6
5	USB2DN_DP1		X							X					
6	USB2DN_DM1		X							X					
7	USB3DN_TXDP1		X							X					
8	USB3DN_TXDM1		X							X					
10	USB3DN_RXDP1		X							X					
11	USB3DN_RXDM1		X							X					
14	USB2DN_DP2			X							X				
15	USB2DN_DM2			X							X				
16	USB3DN_TXDP2			X							X				
17	USB3DN_TXDM2			X							X				
19	USB3DN_RXDP2			X							X				
20	USB3DN_RXDM2			X							X				
27	USB2DN_DP3				X							X			
28	USB2DN_DM3				X							X			
29	USB3DN_TXDP3				X							X			
30	USB3DN_TXDM3				X							X			
32	USB3DN_RXDP3				X							X			
33	USB3DN_RXDM3				X							X			
34	USB2DN_DP4					X							X		
35	USB2DN_DM4					X							X		
36	USB3DN_TXDP4					X							X		
37	USB3DN_TXDM4					X							X		
39	USB3DN_RXDP4					X							X		
40	USB3DN_RXDM4					X							X		
41	USB2DN_DM6							X							X
42	USB2DN_DP6							X							X
81	USB2DN_DP5						X							X	
82	USB2DN_DM5						X							X	
83	USB3DN_TXDP5						X							X	
84	USB3DN_TXDM5						X							X	
86	USB3DN_RXDP5						X							X	
87	USB3DN_RXDM5						X							X	
89	USB2UP_DP	X							X						
90	USB2UP_DM	X							X						
91	USB3UP_TXDP	X							X						
92	USB3UP_TXDM	X							X						
94	USB3UP_RXDP	X							X						
95	USB3UP_RXDM	X							X						

© 2018 - 2020 Microchip Technology Inc.

4.0 DEVICE CONNECTIONS

4.1 Power Connections

Figure 4-1 illustrates the device power connections.

FIGURE 4-1: POWER CONNECTIONS

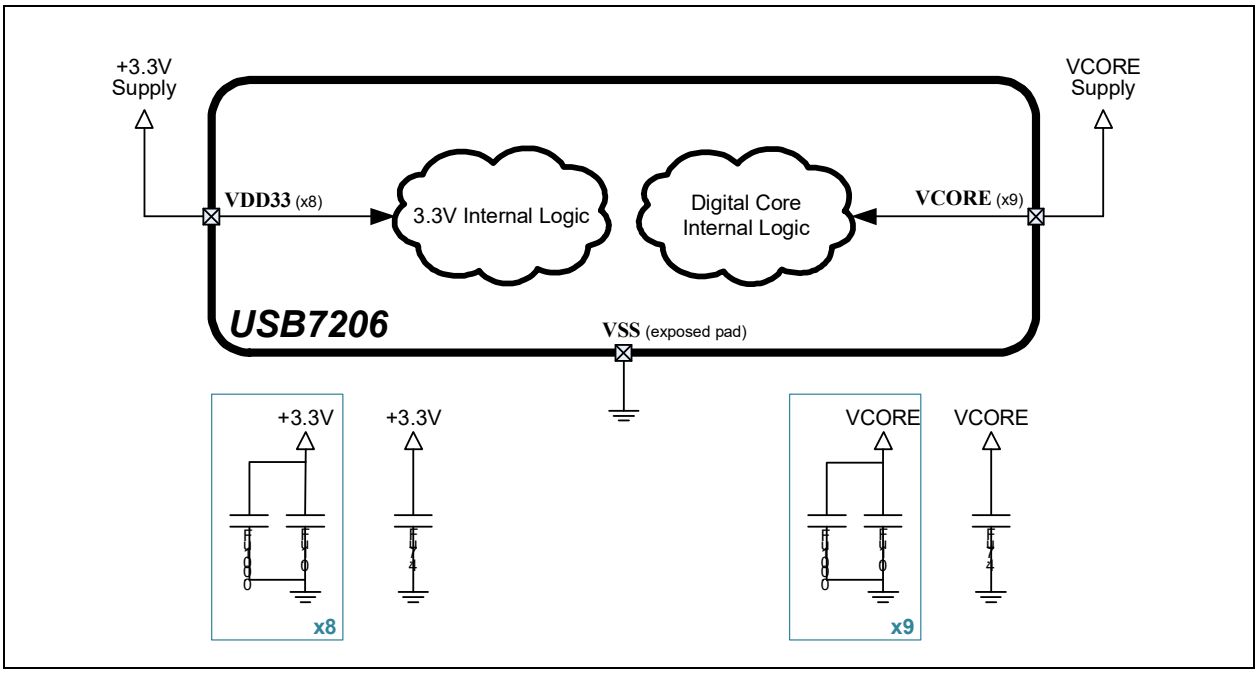

4.2 SPI Flash Connections

Figure 4-2 illustrates the Quad-SPI flash connections.

FIGURE 4-2: QUAD-SPI FLASH CONNECTIONS

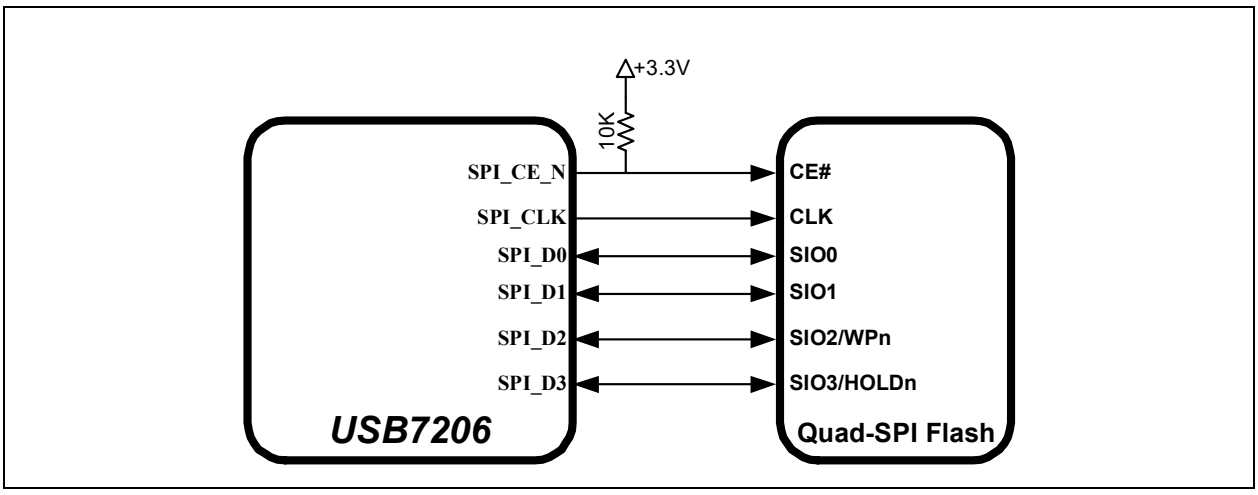

4.3 SMBus/I2C Connections

Figure 4-3 illustrates the SMBus/I2C connections.

FIGURE 4-3: SMBUS/I2C CONNECTIONS

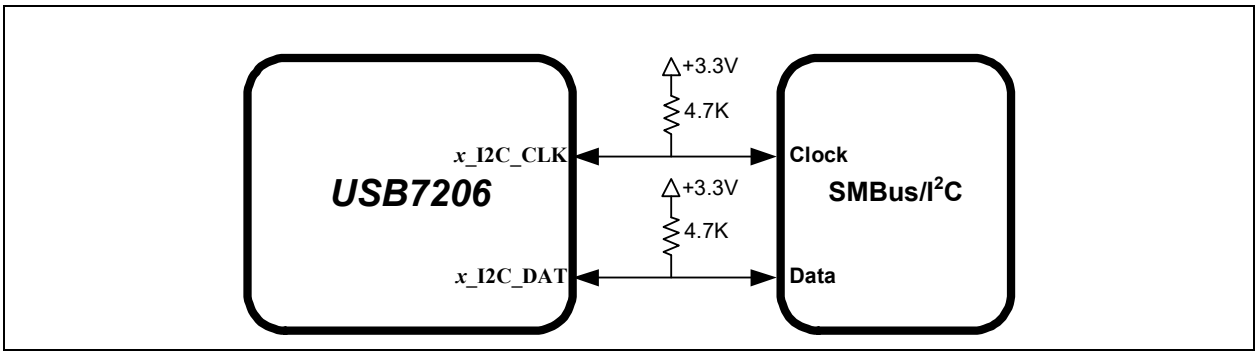

4.4 I2S Connections

Figure 4-4 illustrates the I2S connections.

FIGURE 4-4: I2S CONNECTIONS

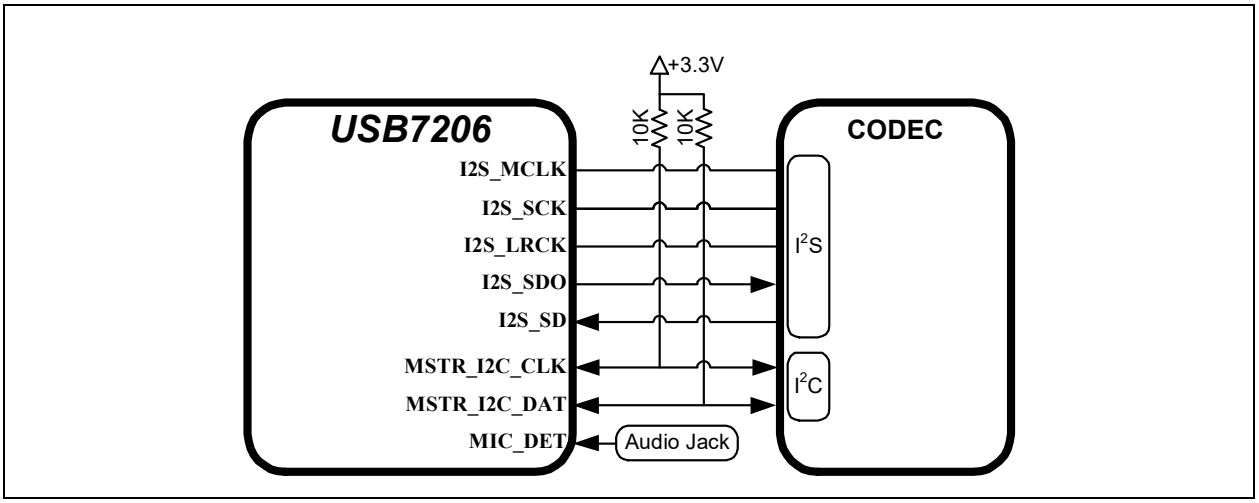

© 2018 - 2020 Microchip Technology Inc.

5.0 MODES OF OPERATION

The device provides two main modes of operation: Standby Mode and Hub Mode. These modes are controlled via the RESET_N pin, as shown in Table 5-1.

TABLE 5-1: MODES OF OPERATION

RESET_N Input	Summary
0	**Standby Mode**: This is the lowest power mode of the device. No functions are active other than monitoring the RESET_N input. All port interfaces are high impedance and the PLL is halted. Refer to Section 8.9, Resets for additional information on RESET_N.
1	**Hub (Normal) Mode**: The device operates as a configurable USB hub. This mode has various sub-modes of operation, as detailed in Figure 5-1. Power consumption is based on the number of active ports, their speed, and amount of data received.

The flowchart in Figure 5-1 details the modes of operation and details how the device traverses through the Hub Mode stages (shown in bold). The remaining sub-sections provide more detail on each stage of operation.

FIGURE 5-1: HUB MODE FLOWCHART

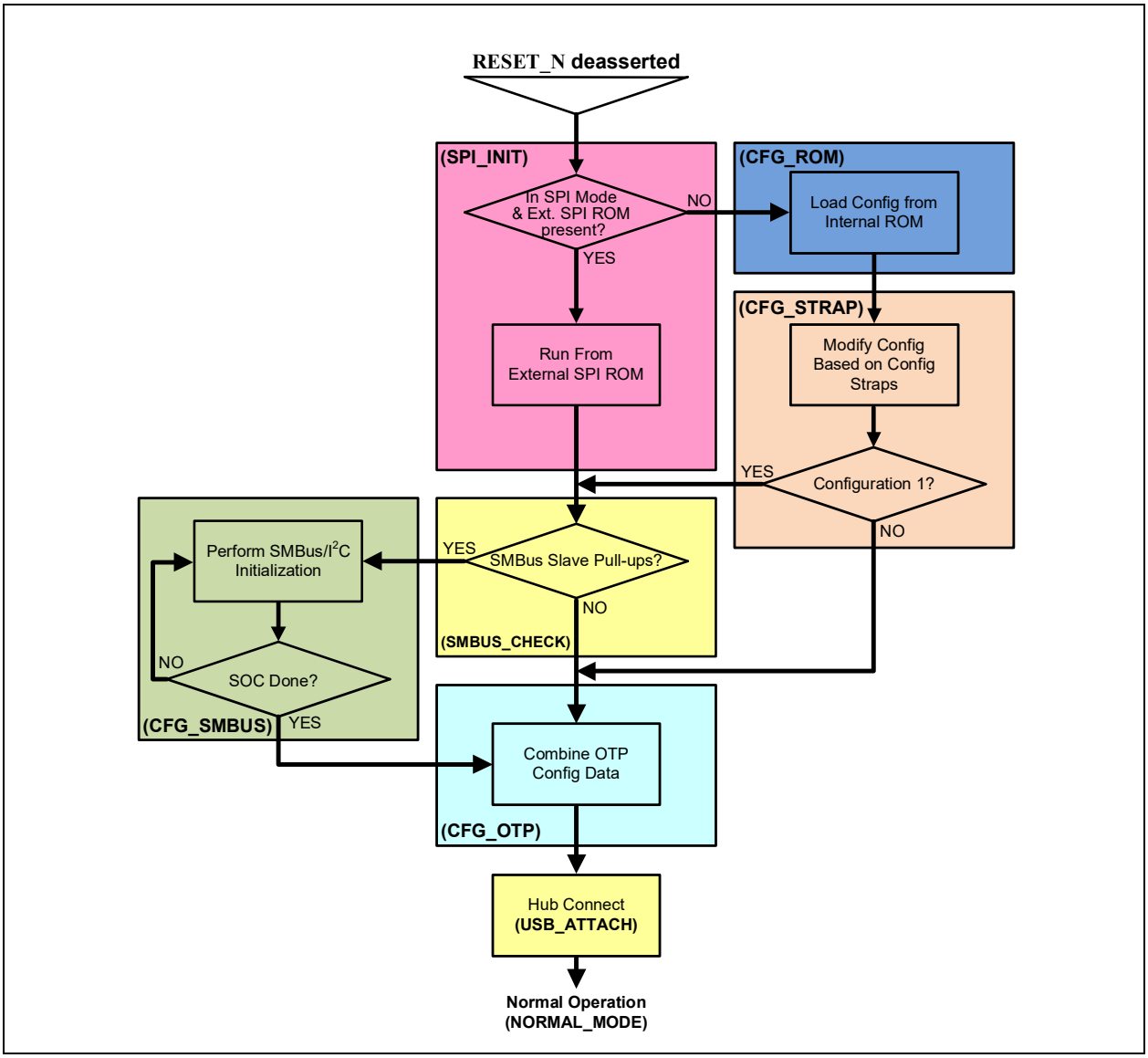

5.1 Boot Sequence

5.1.1 STANDBY MODE

If the **RESET_N** pin is asserted, the hub will be in Standby Mode. This mode provides a very low power state for maximum power efficiency when no signaling is required. This is the lowest power state. In Standby Mode all downstream ports are disabled, the USB data pins are held in a high-impedance state, all transactions immediately terminate (no states saved), all internal registers return to their default state, the PLL is halted, and core logic is powered down in order to minimize power consumption. Because core logic is powered off, no configuration settings are retained in this mode and must be re-initialized after **RESET_N** is negated high.

5.1.2 SPI INITIALIZATION STAGE (SPI_INIT)

The first stage, the initialization stage, occurs on the deassertion of **RESET_N**. In this stage, the internal logic is reset, the PLL locks if a valid clock is supplied, and the configuration registers are initialized to their default state. The internal firmware then checks for an external SPI ROM. The firmware looks for an external SPI flash device that contains a valid signature of "2DFU" (device firmware upgrade) beginning at address 0x3FFFA. If a valid signature is found, then the external SPI ROM is enabled and the code execution begins at address 0x0000 in the external SPI device. If a valid signature is not found, then execution continues from internal ROM (CFG_ROM stage).

The required SPI ROM must be a minimum of 1 Mbit, and 60 MHz or faster. Both 1, 2, and 4-bit SPI operation is supported. For optimum throughput, a 2-bit SPI ROM is recommended. Both mode 0 and mode 3 SPI ROMs are also supported.

If the system is not strapped for SPI Mode, code execution will continue from internal ROM (CFG_ROM stage).

5.1.3 CONFIGURATION FROM INTERNAL ROM STAGE (CFG_ROM)

In this stage, the internal firmware loads the default values from the internal ROM. Most of the hub configuration registers, USB descriptors, electrical settings, etc. will be initialized in this state.

5.1.4 CONFIGURATION STRAP READ STAGE (CFG_STRAP)

In this stage, the firmware reads the following configuration straps to override the default values:

- **CFG_STRAP[3:1]**
- **PRT_DIS_P[6:1]**
- **PRT_DIS_M[6:1]**
- **CFG_NON_REM**
- **CFG_BC_EN**

If the **CFG_STRAP[3:1]** pins are set to Configuration 1, the device will move to the SMBUS_CHECK stage, otherwise it will move to the CFG_OTP stage. Refer to Section 3.3, Configuration Straps and Programmable Functions for information on usage of the various device configuration straps.

5.1.5 SMBUS CHECK STAGE (SMBUS_CHECK)

Based on the **PF[31:3]** configuration selected (refer to Section 3.3.4, PF[31:3] Configuration (CFG_STRAP[2:1])), the firmware will check for the presence of external pull up resistors on the SMBus slave programmable function pins. If 10K pull-ups are detected on both pins, the device will be configured as an SMBus slave, and the next state will be CFG_SMBUS. If a pull-up is not detected in either of the pins, the next state is CFG_OTP.

5.1.6 SMBUS CONFIGURATION STAGE (CFG_SMBUS)

In this stage, the external SMBus master can modify any of the default configuration settings specified in the integrated ROM, such as USB device descriptors, port electrical settings, and control features such as downstream battery charging.

There is no time limit on this mode. In this stage the firmware will wait indefinitely for the SMBus/I^2C configuration. The external SMBus master writes to register 0xFF to end the configuration in legacy mode. In non-legacy mode, the SMBus command USB_ATTACH (opcode 0xAA55) or USB_ATTACH_WITH_SMBUS (opcode 0xAA56) will finish the configuration.

© 2018 - 2020 Microchip Technology Inc.

5.1.7 OTP CONFIGURATION STAGE (CFG_OTP)

Once the SOC has indicated that it is done with configuration, all configuration data is combined in this stage. The default data, the SOC configuration data, and the OTP data are all combined in the firmware and the device is programmed.

Note:	If the same register is modified in both CFG_SMBUS and CFG_OTP stages, the value from CFG_OTP will overwrite any value written during CFG_SMBUS.

5.1.8 HUB CONNECT STAGE (USB_ATTACH)

Once the hub registers are updated through default values, SMBus master, and OTP, the device firmware will enable attaching the USB host by setting the USB_ATTACH bit in the HUB_CMD_STAT register (for USB 2.0) and the USB3_HUB_ENABLE bit (for USB 3.2). The device will remain in the Hub Connect stage indefinitely.

5.1.9 NORMAL MODE (NORMAL_MODE)

Lastly, the hub enters Normal Mode of operation. In this stage full USB operation is supported under control of the USB Host on the upstream port. The device will remain in the normal mode until the operating mode is changed by the system.

If **RESET_N** is asserted low, then Standby Mode is entered. The device may then be placed into any of the designated hub stages. Asserting a soft disconnect on the upstream port will cause the hub to return to the Hub Connect stage until the soft disconnect is negated.

6.0 DEVICE CONFIGURATION

The device supports a large number of features (some mutually exclusive), and must be configured in order to correctly function when attached to a USB host controller. Microchip provides a comprehensive software programming tool, MPLAB Connect Configurator (formerly ProTouch2), for OTP configuration of various USB7206 functions and registers. All configuration is to be performed via the MPLAB Connect Configurator programming tool. For additional information on this tool, refer to the MPLAB Connect Configurator programming tool product page at http://www.microchip.com/design-centers/usb/mplab-connect-configurator.

Additional information on configuring the USB7206 is also provided in the "*Configuration of the USB7202/USB725x*" application note, which contains details on the hub operational mode, SOC configuration stage, OTP configuration, USB configuration, and configuration register definitions. This application note, along with additional USB7206 resources, can be found on the Microchip USB7206 product page at www.microchip.com/USB7206.

Note:	Device configuration straps and programmable pins are detailed in Section 3.3, Configuration Straps and Programmable Functions. Refer to Section 7.0, Device Interfaces for detailed information on each device interface.

© 2018 - 2020 Microchip Technology Inc.

7.0 DEVICE INTERFACES

The USB7206 provides multiple interfaces for configuration, external memory access, etc.. This section details the various device interfaces:

- SPI/SQI Master Interface
- SMBus/I2C Master/Slave Interfaces
- I2S Interface

Note: For details on how to enable each interface, refer to Section 3.3, Configuration Straps and Programmable Functions.

For information on device connections, refer to Section 4.0, Device Connections. For information on device configuration, refer to Section 6.0, Device Configuration.

Microchip provides a comprehensive software programming tool, MPLAB Connect Configurator (formerly ProTouch2), for configuring the USB7206 functions, registers and OTP memory. All configuration is to be performed via the MPLAB Connect Configurator programming tool. For additional information on this tool, refer to th MPLAB Connect Configurator programming tool product page at http://www.microchip.com/design-centers/usb/mplab-connect-configurator.

7.1 SPI/SQI Master Interface

The SPI/SQI controller has two basic modes of operation: execution of an external hub firmware image, or the USB to SPI bridge. On power up, the firmware looks for an external SPI flash device that contains a valid signature of `2DFU` (device firmware upgrade) beginning at address 0x3FFFA. If a valid signature is found, then the external ROM mode is enabled and the code execution begins at address 0x0000 in the external SPI device. If a valid signature is not found, then execution continues from internal ROM and the SPI interface can be used as a USB to SPI bridge.

The entire firmware image is then executed in place entirely from the SPI interface. The SPI interface will remain continuously active while the hub is in the runtime state. The hub configuration options are also loaded entirely out of the SPI memory device. Both the internal ROM firmware image and internal OTP memory are completely ignored while executing the firmware and configuration from the external SPI memory.

The second mode of operation is the USB to SPI bridge operation. Additional details on this feature can be found in Section 8.7, USB to SPI Bridging.

Table 7-1 details how the associated pins are mapped in SPI vs. SQI mode

TABLE 7-1: SPI/SQI PIN USAGE

SPI Mode	SQI Mode	Description
SPI_CE_N	SQI_CE_N	SPI/SQI Chip Enable (Active Low)
SPI_CLK	SQI_CLK	SPI/SQI Clock
SPI_D0	SQI_D0	SPI Data Out; SQI Data I/O 0
SPI_D1	SQI_D1	SPI Data In; SQI Data I/O 1
-	SQI_D2	SQI Data I/O 2
-	SQI_D3	SQI Data I/O 3

Note: For SPI/SQI master timing information, refer to Section 9.6.10, SPI/SQI Master Timing.

7.2 SMBus/I2C Master/Slave Interfaces

The device provides twothree independent SMBus/I2C controllers (Slave, and Master) which can be used to access internal device run time registers or program the internal OTP memory. The device contains two 128 byte buffers to enable simultaneous master/slave operation and to minimize firmware overhead in processed I2C packets. The I2C interfaces support 100KHz Standard-mode (Sm) and 400KHz Fast Mode (Fm) operation.

The SMBus/I2C interfaces are assigned to programmable pins (**PF*x***). Refer to Section 3.3.4, PF[31:3] Configuration (CFG_STRAP[2:1]) for additional information.

Note: For SMBus/I2C timing information, refer to Section 9.6.7, SMBus Timing and Section 9.6.8, I2C Timing.

7.3 I2S Interface

The device provides an integrated I2S interface to facilitate the connection of digital audio devices. The I2S interface conforms to the voltage, power, and timing characteristics/specifications as set forth in the *I2S-Bus Specification*, and consists of the following signals:

- **I2S_SDI**: Serial Data Input
- **I2S_SDO**: Serial Data Output
- **I2S_SCK**: Serial Clock
- **I2S_LRCK**: Left/Right Clock (SS/FSYNC)
- **I2S_MCLK**: Master Clock
- **MIC_DET**: Microphone Plug Detect

Each audio connection is half-duplex, so **I2S_SDO** exists only on the transmit side and **I2S_SDI** exists only on the receive side of the interface. Some codecs refer to the Serial Clock (**I2S_SCK**) as Baud/Bit Clock (BCLK). Also, the Left/Right Clock is commonly referred to as LRC or LRCK. The I2S and other audio protocols refer to LRC as Word Select (WS).

The following codec is supported by default:

- Analog Devices ADAU1961 (24-bit 96KHz)

The I2S interface is assigned to programmable pins (**PF*x***). Refer to Section 3.3.4, PF[31:3] Configuration (CFG_STRAP[2:1]) for additional information.

Note: For I2S timing information, refer to Section 9.6.9, I2S Timing. For detailed information on utilizing the I2S interface, including support for other codecs, refer to the application note "*USB7202/USB725x I2S Operation*", which can be found on the Microchip USB7206 product page at www.microchip.com/USB7206.

7.3.1 MODES OF OPERATION

The USB audio class operates in three ways: Asynchronous, Synchronous and Adaptive. There are also multiple operating modes, such as hi-res, streaming, etc.. Typically for USB devices, inputs such as microphones are Asynchronous, and output devices such as speakers are Adaptive. The hardware is set up to handle all three modes of operation. It is recommended that the following configuration be used: Asynchronous IN; Adaptive OUT; 48Khz streaming mode; Two channels: 16 bits per channel.

7.3.1.1 Asynchronous IN 48KHz Streaming

In this mode, the codec sampling clock is set to 48Khz based on the local oscillator. This clock is never changed. The data from the codec is fed into the input FIFO. Since the sampling clock is asynchronous to the host clock, the amount of data captured in every USB frame will vary. This issue is left for the host to handle. The input FIFO has two markers, a low water mark (THRESHOLD_LOW_VAL), and a high water mark (THRESHOLD_HIGH_VAL). There are three registers to determine how much data to send back in each frame. If the amount of data in the FIFO exceeds the high water mark, then HI_PKT_SIZE worth of data is sent. If the data is between the high and low water mark, the normal MID_PKT_SIZE amount of data is sent. If the data is below the low water mark, LO_PKT_SIZE worth of data is sent.

© 2018 - 2020 Microchip Technology Inc.

7.3.1.2 Adaptive OUT 48KHz Streaming

In this mode, the codec sampling clock is initially set to 48Khz based on the local oscillator. The host data is fed into the OUT FIFO. The host will send the same amount of data on every frame, i.e. 48KHz of data based on the host clock. The codec sampling clock is asynchronous to the host clock. This will cause the amount of data in the OUT FIFO to vary. If the amount of data in the FIFO exceeds the high water mark, then the sampling clock is increased. If the data is between the high and low water mark, the sampling clock does not change. If the data is below the low water mark, the sampling clock is decreased.

7.3.1.3 Synchronous Operation

For synchronous operation, the internal clock must be synchronized with the host SOF. The Frame SOF is nominally 1mS. Since there is significant jitter in the SOFs, there is circuitry provided to measure the SOFs over a long period of time to get a more accurate reading. The calculated host frequency is used to calculate the codec sampling clock.

8.0 FUNCTIONAL DESCRIPTIONS

This section details various USB7206 functions, including:

- Downstream Battery Charging
- Port Power Control
- PortSplit
- FlexConnect
- USB to GPIO Bridging
- USB to I2C Bridging
- USB to SPI Bridging
- Link Power Management (LPM)
- Resets

8.1 Downstream Battery Charging

The device can be configured by an OEM to have any of the downstream ports support battery charging. The hub's role in battery charging is to provide acknowledgment to a device's query as to whether the hub system supports USB battery charging. The hub silicon does not provide any current or power FETs or any additional circuitry to actually charge the device. Those components must be provided externally by the OEM.

FIGURE 8-1: BATTERY CHARGING EXTERNAL POWER SUPPLY

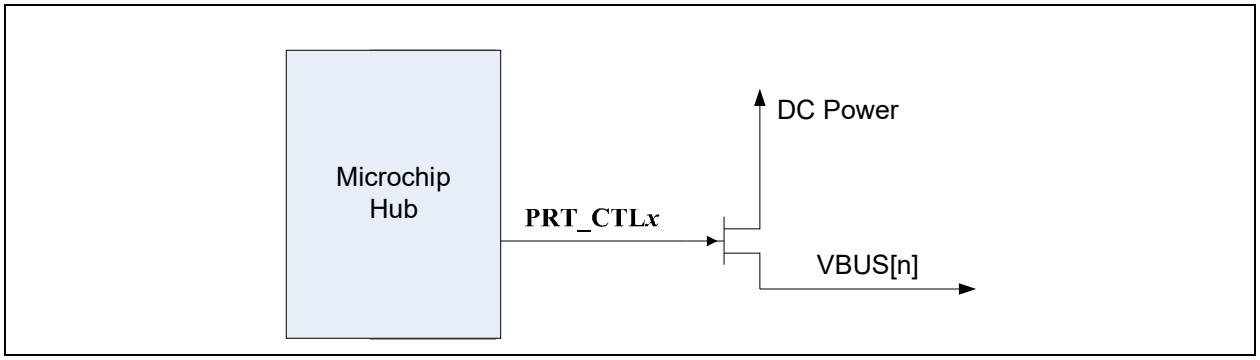

If the OEM provides an external supply capable of supplying current per the battery charging specification, the hub can be configured to indicate the presence of such a supply from the device. This indication, via the **PRT_CTL*x*** pins, is on a per port basis. For example, the OEM can configure two ports to support battery charging through high current power FETs and leave the other two ports as standard USB ports.

The port control signals are assigned to programmable pins (**PF*x***) and therefore the device must be programmed into specific configurations to enable the signals. Refer to Section 3.3.4, PF[31:3] Configuration (CFG_STRAP[2:1]) for additional information.

For detailed information on utilizing the battery charging feature, refer to the application note "*USB Battery Charging with Microchip USB7202 and USB725x Hubs*", which can be found on the Microchip USB7206 product page www.microchip.com/USB7206.

© 2018 - 2020 Microchip Technology Inc.

8.2 Port Power Control

Port power and over-current sense share the same pin (**PRT_CTLx**) for each port. These functions can be controlled directly from the USB hub, or via the processor.

Note:	The **PRT_CTLx** function is assigned to programmable function pins (**PFx**) via configuration straps. Refer to Section 3.3.4, PF[31:3] Configuration (CFG_STRAP[2:1]) for additional information.

8.2.1 PORT POWER CONTROL USING USB POWER SWITCH

When operating in combined mode, the device will have one port power control and over-current sense pin for each downstream port. When disabling port power, the driver will actively drive a '0'. To avoid unnecessary power dissipation, the pull-up resistor will be disabled at that time. When port power is enabled, it will disable the output driver and enable the pull-up resistor, making it an open drain output. If there is an over-current situation, the USB Power Switch will assert the open drain OCS signal. The Schmidt trigger input will recognize that as a low. The open drain output does not interfere. The over-current sense filter handles the transient conditions such as low voltage while the device is powering up.

Note:	An external power switch is the required implementation for Type-C ports due to the requirement that VBUS on Type-C ports must be discharged to 0V when no device is attached to the port.

FIGURE 8-2: PORT POWER CONTROL WITH USB POWER SWITCH

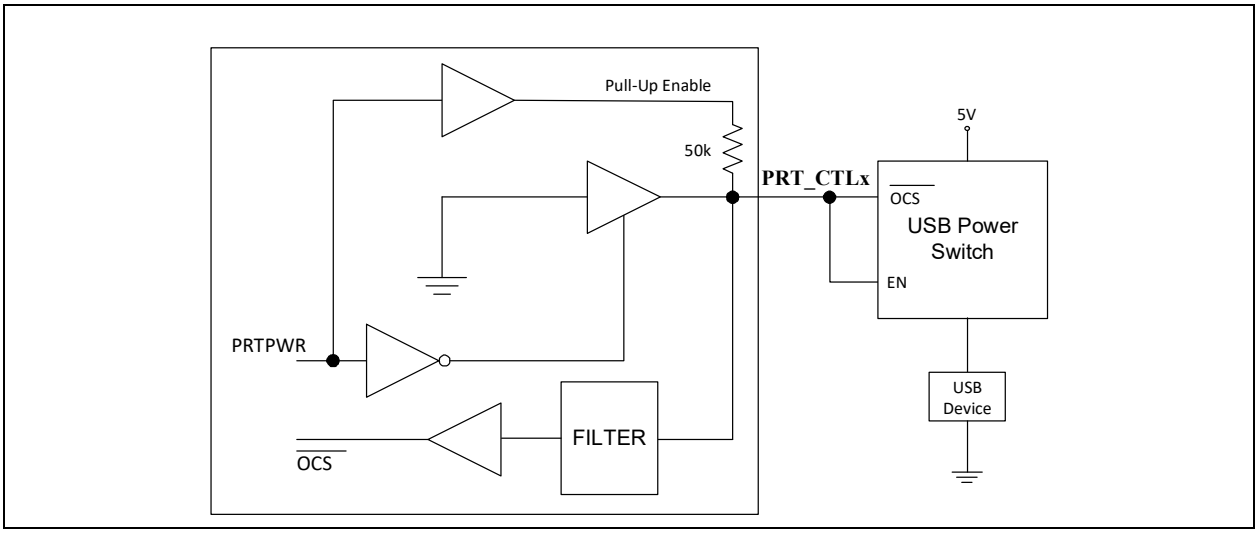

8.2.2 PORT POWER CONTROL USING POLY FUSE

When using the device with a poly fuse, there is no need for an output power control. A single port power control and over-current sense for each downstream port is still used from the Hub's perspective. When disabling port power, the driver will actively drive a '0'. This will have no effect as the external diode will isolate pin from the load. When port power is enabled, it will disable the output driver and enable the pull-up resistor. This means that the pull-up resistor is providing 3.3 volts to the anode of the diode. If there is an over-current situation, the poly fuse will open. This will cause the cathode of the diode to go to 0 volts. The anode of the diode will be at 0.7 volts, and the Schmidt trigger input will register this as a low resulting in an over-current detection. The open drain output does not interfere.

Note:	Type-C ports may not utilize a Poly-Fuse port power implementation due to the requirements that VBUS on Type-C ports must be discharged to 0V when no device is attached to the port.

FIGURE 8-3: PORT POWER CONTROL USING A POLY FUSE

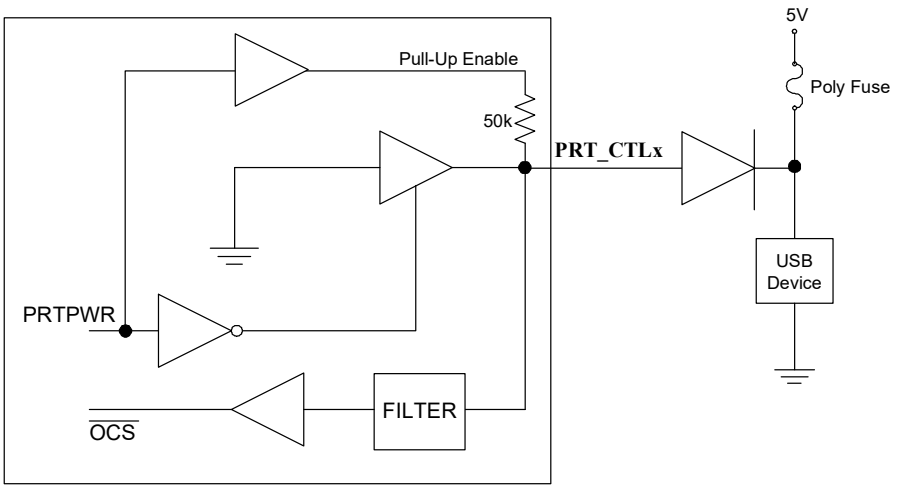

8.3 PortSplit

The PortSplit feature allows the USB 2.0 and USB 3.2 PHYs associated with a downstream port to be operationally separated. The intention of this feature is to allow a system designer to connect an embedded USB 3.x device to the USB 3.2 PHY, while allowing the USB 2.0 PHY to be used as either a standard USB 2.0 port or with a separate embedded USB 2.0 device. PortSplit can be configured via OTP/SMBus. By default, all ports are configured to non-split mode.

When PortSplit is disabled on a specific port, the corresponding **PRT_CTL*x*** pin controls both the USB 2.0 and USB 3.2 portions of the port (port power and overcurrent condition). When PortSplit is enabled on a specific port, the corresponding **PRT_CTL*x*** pin controls the USB 2.0 portion of the port, and the corresponding **PRT_CTL*x*_U3** pin controls the USB 3.2 portion of the port.

8.4 FlexConnect

The device allows the upstream port to be swapped with any downstream port, enabling any USB port to assume the role of USB host at any time during hub operation. This host role exchange feature is called FlexConnect. Additionally, the USB 2.0 ports can be flexed independently of the USB 3.2 ports.

This functionality can be used in two primary ways:

1. **Host Swapping:** This functionality can be achieved through a hub wherein a host and device can agree to swap the host/device relationship; The host becomes a device, and the device becomes a host.
2. **Host Sharing:** A USB ecosystem can be shared between multiple hosts. Note that only 1 host may access to the USB tree at a time.

FlexConnect can be enabled through any of the following three methods:

- **I²C Control:** The embedded I²C slave can be used to control the state of the FlexConnect feature through basic write/read operations.
- **USB Command:** FlexConnect can be initiated via a special USB command directed to the hub's internal Hub Feature Controller device.
- **Direct Pin Control:** Any available GPIO pin on the hub can be assigned the role of a FlexConnect control pin.

Note:	Direct Pin Control is only available in certain configurations. Refer to Section 3.3.4, PF[31:3] Configuration (CFG_STRAP[2:1]) for additional information.

© 2018 - 2020 Microchip Technology Inc.

For detailed information on utilizing the FlexConnect feature, refer to the application note "*USB720x/USB725x FlexConnect Operation*", which can be found on the Microchip USB7206 product page at www.microchip.com/USB7206.

8.5 USB to GPIO Bridging

The USB to GPIO bridging feature provides system designers expanded system control and potential BOM reduction. General Purpose Input/Outputs (GPIOs) may be used for any general 3.3V level digital control and input functions.

Commands may be sent from the USB Host to the internal Hub Feature Controller device in the Microchip hub to perform the following functions:

- Set the direction of the GPIO (input or output)
- Enable a pull-up resistor
- Enable a pull-down resistor
- Read the state
- Set the state

For detailed information on utilizing the USB to GPIO bridging feature, refer to the application note "*USB to GPIO Bridging with Microchip USB7202 and USB725x Hubs*", which can be found on the Microchip USB7206 product page at www.microchip.com/USB7206.

8.6 USB to I^2C Bridging

The USB to I^2C bridging feature provides system designers expanded system control and potential BOM reduction. The use of a separate USB to I^2C device is no longer required and a downstream USB port is not lost, as occurs when a standalone USB to I^2C device is implemented.

Commands may be sent from the USB Host to the internal Hub Feature Controller device in the Microchip hub to perform the following functions:

- Configure I^2C Pass-Through Interface
- I^2C Write
- I^2C Read

For detailed information on utilizing the USB to I^2C bridging feature, refer to the application note "*USB to I^2C Bridging with Microchip USB7202 and USB725x Hubs*", which can be found on the Microchip USB7206 product page at www.microchip.com/USB7206.

8.7 USB to SPI Bridging

The USB to SPI bridging feature provides system designers expanded system control and potential BOM reduction. The use of a separate USB to SPI device is no longer required and a downstream USB port is not lost, as occurs when a standalone USB to SPI device is implemented.

Commands may be sent from the USB Host to the internal Hub Feature Controller device in the Microchip hub to perform the following functions:

- Enable SPI Pass-Through Interface
- SPI Write/Read
- Disable SPI Pass-Through Interface

For detailed information on utilizing the USB to SPI bridging feature, refer to the application note "*USB to SPI Bridging with Microchip USB7202 and USB725x Hubs*", which can be found on the Microchip USB7206 product page at www.microchip.com/USB7206.

8.8 Link Power Management (LPM)

The device supports the L0 (On), L1 (Sleep), and L2 (Suspend) link power management states. These supported LPM states offer low transitional latencies in the tens of microseconds versus the much longer latencies of the traditional USB suspend/resume in the tens of milliseconds. The supported LPM states are detailed in Table 8-1.

TABLE 8-1: LPM STATE DEFINITIONS

State	Description	Entry/Exit Time to L0
L2	Suspend	Entry: ~3 ms Exit: ~2 ms (from start of RESUME)
L1	Sleep	Entry: <10 us Exit: <50 us
L0	Fully Enabled (On)	-

8.9 Resets

The device includes the following chip-level reset sources:

- Power-On Reset (POR)
- External Chip Reset (RESET_N)
- USB Bus Reset

8.9.1 POWER-ON RESET (POR)

A power-on reset occurs whenever power is initially supplied to the device, or if power is removed and reapplied to the device. A timer within the device will assert the internal reset per the specifications listed in Section 9.6.2, Power-On and Configuration Strap Timing.

8.9.2 EXTERNAL CHIP RESET (RESET_N)

A valid hardware reset is defined as assertion of **RESET_N**, after all power supplies are within operating range, per the specifications in Section 9.6.3, Reset and Configuration Strap Timing. While reset is asserted, the device (and its associated external circuitry) enters Standby Mode and consumes minimal current.

Assertion of **RESET_N** causes the following:

1. The PHY is disabled and the differential pairs will be in a high-impedance state.
2. All transactions immediately terminate; no states are saved.
3. All internal registers return to the default state.
4. The external crystal oscillator is halted.
5. The PLL is halted.

Note: All power supplies must have reached the operating levels mandated in Section 9.2, Operating Conditions**, prior to (or coincident with) the assertion of **RESET_N**.

8.9.3 USB BUS RESET

In response to the upstream port signaling a reset to the device, the device performs the following:

1. Sets default address to 0.
2. Sets configuration to Unconfigured.
3. Moves device from suspended to active (if suspended).
4. Complies with the USB Specification for behavior after completion of a reset sequence.

The host then configures the device in accordance with the USB Specification.

Note: The device does not propagate the upstream USB reset to downstream devices.

© 2018 - 2020 Microchip Technology Inc.

9.0 OPERATIONAL CHARACTERISTICS

9.1 Absolute Maximum Ratings*

Digital Core Supply Voltage (**VCORE**) (Note 1) . . . . . -0.5 V to +1.21 V

+3.3 V Supply Voltage (**VDD33**) (Note 1) . . . . . -0.5 V to +4.6 V

Positive voltage on input signal pins, with respect to ground (Note 2) . . . . . +4.6 V

Negative voltage on input signal pins, with respect to ground . . . . . -0.5 V

Positive voltage on **XTALI/CLK_IN**, with respect to ground . . . . . +3.63 V

Positive voltage on USB DP/DM signal pins, with respect to ground . . . . . +6.0 V

Positive voltage on USB 3.2 Gen 2 **USB3UP_*xxxx*** and **USB3DN_*xxxx*** signal pins, with respect to ground . . . . . 1.21 V

Storage Temperature . . . . . -55°C to +150°C

Junction Temperature . . . . . +125°C

Lead Temperature Range . . . . . Refer to JEDEC Spec. J-STD-020

HBM ESD Performance . . . . . +/-3.5 kV

Note 1: When powering this device from laboratory or system power supplies, it is important that the absolute maximum ratings not be exceeded or device failure can result. Some power supplies exhibit voltage spikes on their outputs when AC power is switched on or off. In addition, voltage transients on the AC power line may appear on the DC output. If this possibility exists, it is suggested that a clamp circuit be used.

Note 2: This rating does not apply to the following pins: All USB DM/DP pins, **XTAL1/CLK_IN**, **XTALO** and **VBUS_MON_UP**.

*Stresses exceeding those listed in this section could cause permanent damage to the device. This is a stress rating only. Exposure to absolute maximum rating conditions for extended periods may affect device reliability. Functional operation of the device at any condition exceeding those indicated in Section 9.2, Operating Conditions**, Section 9.5, DC Specifications, or any other applicable section of this specification is not implied.

9.2 Operating Conditions**

Digital Core Supply Voltage (**VCORE**) . . . . . +1.09 V to +1.21 V

+3.3 V Supply Voltage (**VDD33**) . . . . . +3.0 V to +3.6 V

Input Signal Pins Voltage (Note 2) . . . . . -0.3 V to +3.6 V

XTALI/CLK_IN Voltage . . . . . -0.3 V to +3.6 V

USB 2.0 DP/DM Signal Pins Voltage . . . . . -0.3 V to +5.5 V

USB 3.2 Gen 2 **USB3UP_*xxxx*** and **USB3DN_*xxxx*** Signal Pins Voltage . . . . . -0.3 V to +1.21 V

Ambient Operating Temperature in Still Air (T_A) . . . . . Note 3

Digital Core Supply Voltage Rise Time (T_{RT} in Figure 9-1). . . . . 5 ms

+3.3 V Supply Voltage Rise Time (T_{RT} in Figure 9-1) . . . . . 5 ms

Note 3: 0°C to +70°C for commercial version, -40°C to +85°C for industrial version. **Proper operation of the device is guaranteed only within the ranges specified in this section. Do not drive input signals without power supplied to the device.

FIGURE 9-1: SUPPLY RISE TIME MODEL

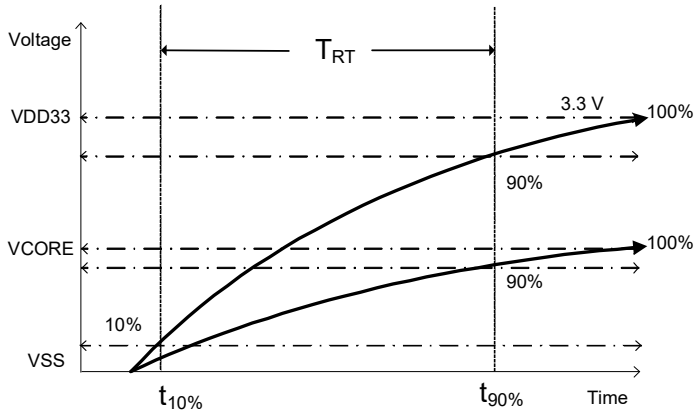

Note: The Power Supply Rise time requirement does not apply if the **RESET_N** signal is held low during power on and released after power levels rise and stabilize above the power on thresholds, or if the **RESET_N** signal is toggled after power supplies become stable.

9.3 Package Thermal Specifications

TABLE 9-1: PACKAGE THERMAL PARAMETERS

Symbol	°C/W	Velocity (Meters/s)
Θ_{JA}	19	0
	16	1
	14	2.5
Ψ_{JT}	0.1	0
	0.1	1
Ψ_{JB}	9	0
Θ_{JC}	1.3	0
	1.3	1
Θ_{JB}	10	-

Note: Thermal parameters are measured or estimated for devices in a multi-layer 2S2P PCB per JESDN51. For industrial applications, the USB7206 requires multi-layer 2S4P PCB power dissipation.

© 2018 - 2020 Microchip Technology Inc.

9.4 Power Consumption

This section details the power consumption of the device as measured during various modes of operation. Power dissipation is determined by temperature, supply voltage, and external source/sink requirements.

TABLE 9-2: DEVICE POWER CONSUMPTION

	Typical (mA) @ 25°C		Typical Power
	VCORE (1.15V)	**VDD33 (3.3V)**	**(mW)**
Global Suspend	5.4	2.3	14
VBUS Off	5.3	6.4	27
Reset	4.2	0.2	5
Data for Calculating Active Transfer Current			
Upstream Port Link Speed Base Currents			
SS+ Current	410	30.8	
SS Current	370	27.3	
HS Current	58	19.7	
Additional Current Per Enabled Port			
SS+ Current	179	11.1	
SS Current	143	9.1	
HS Current	1	10.8	
Example Active Data Transfer Current Calculation: 1 SS+ Port and 2 HS Ports			
Active Data Transfer Current (mA @ 3.3V)	{30.8} + {1 * 11.1} + {2 * 10.8} = 63.5		
Active Data Transfer Current (mA @ 1.15V)	{410} + {1 * 179} + {2 * 1} = 591		

Note: In the Active Idle and Active Data Transfer sections of Table 9-2, the various port configurations are indicated via the following acronyms:
SS+ = USB 3.2 SuperSpeed+ (Gen 2)
SS = USB 3.2 SuperSpeed (Gen 1)
HS = USB 2.0 High Speed

9.5 DC Specifications

TABLE 9-3: I/O DC ELECTRICAL CHARACTERISTICS

Parameter	Symbol	Min	Typical	Max	Units	Notes
I Type Input Buffer						
Low Input Level	V_{IL}			0.9	V	
High Input Level	V_{IH}	2.1			V	
IS Type Input Buffer						
Low Input Level	V_{IL}			0.9	V	
High Input Level	V_{IH}	2.1			V	
Schmitt Trigger Hysteresis (V_{IHT} - V_{ILT})	V_{HYS}	100	160	240	mV	
O12 Type Output Buffer						
Low Output Level	V_{OL}			0.4	V	I_{OL} = 12 mA
High Output Level	V_{OH}	**VDD33**-0.4			V	I_{OH} = -12 mA
OD12 Type Output Buffer						
Low Output Level	V_{OL}			0.4	V	I_{OL} = 12 mA
ICLK Type Input Buffer (XTALI Input)						Note 4
Low Input Level	V_{IL}			0.35	V	
High Input Level	V_{IH}	1.1			V	
IO-U Type Buffer (See Note 5)						Note 5

Note 4: XTALI can optionally be driven from a 25 MHz singled-ended clock oscillator.

Note 5: Refer to the USB 3.2 Gen 2 Specification for USB DC electrical characteristics.

© 2018 - 2020 Microchip Technology Inc.

9.6 AC Specifications

This section details the various AC timing specifications of the device.

9.6.1 POWER SUPPLY AND RESET_N SEQUENCE TIMING

There is no specific requirement for power sequencing of **VDD33** and **VCORE** for device operation. Figure 9-2 illustrates the recommended power supply sequencing for ensuring long term reliability of the device. **VCORE** should rise after or at the same time as **VDD33**. Similarly, **RESET_N** and/or **VBUS_DET** should rise after or at the same time as **VDD33**. **VBUS_DET** and **RESET_N** do not have any other timing dependencies. The rise times for **VCORE** and **VDD33** are provided in Section 9.2, Operating Conditions** and Figure 9-1.

FIGURE 9-2: POWER SUPPLY AND RESET_N SEQUENCE TIMING

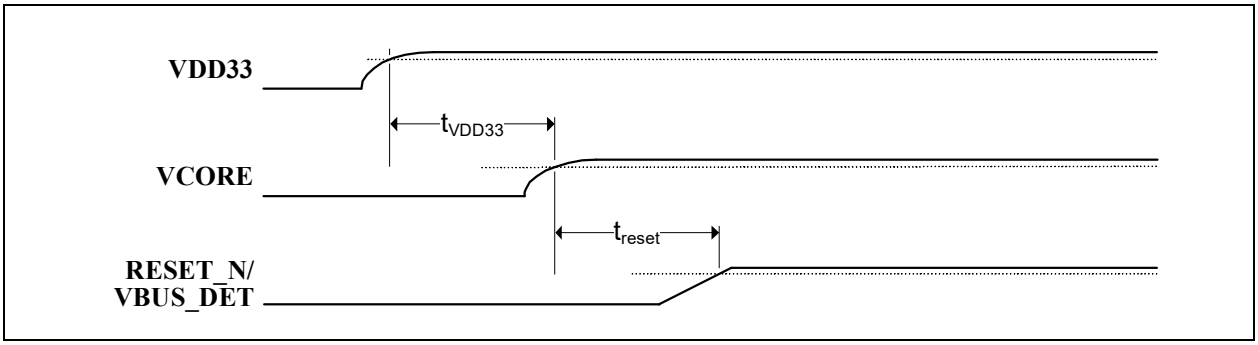

TABLE 9-4: POWER SUPPLY AND RESET_N SEQUENCE TIMING

Symbol	Description	Min	Typ	Max	Units
t_{VDD33}	**VDD33** to **VCORE** rise delay	0			ms
t_{reset}	**VDD33** to **RESET_N/VBUS_DET** rise delay	0			ms

9.6.2 POWER-ON AND CONFIGURATION STRAP TIMING

Figure 9-3 illustrates the configuration strap valid timing requirements in relation to power-on, for applications where **RESET_N** is not used at power-on. In order for valid configuration strap values to be read at power-on, the following timing requirements must be met. The operational levels (V_{opp}) for the external power supplies are detailed in Section 9.2, Operating Conditions**.

FIGURE 9-3: POWER-ON CONFIGURATION STRAP VALID TIMING

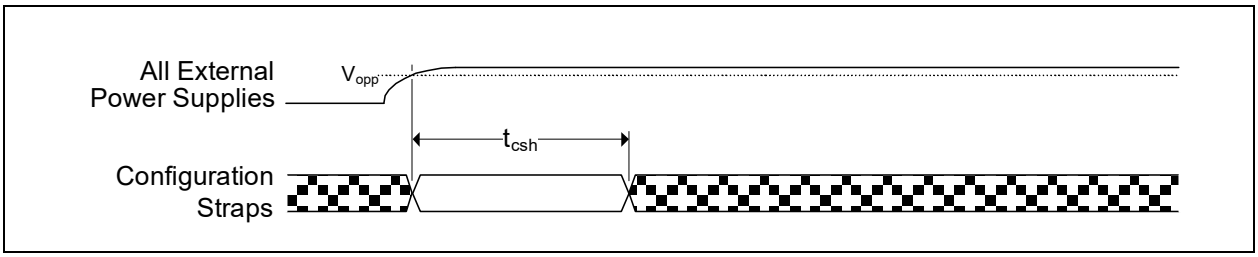

TABLE 9-5: POWER-ON CONFIGURATION STRAP LATCHING TIMING

Symbol	Description	Min	Typ	Max	Units
t_{csh}	Configuration strap hold after external power supplies at operational levels	1			ms

Device configuration straps are also latched as a result of **RESET_N** assertion. Refer to Section 9.6.3, Reset and Configuration Strap Timing for additional details.

9.6.3 RESET AND CONFIGURATION STRAP TIMING

Figure 9-4 illustrates the **RESET_N** pin timing requirements and its relation to the configuration strap pins. Assertion of **RESET_N** is not a requirement. However, if used, it must be asserted for the minimum period specified. Refer to Section 8.9, Resets for additional information on resets. Refer to Section 3.3, Configuration Straps and Programmable Functions for additional information on configuration straps.

FIGURE 9-4: RESET_N CONFIGURATION STRAP TIMING

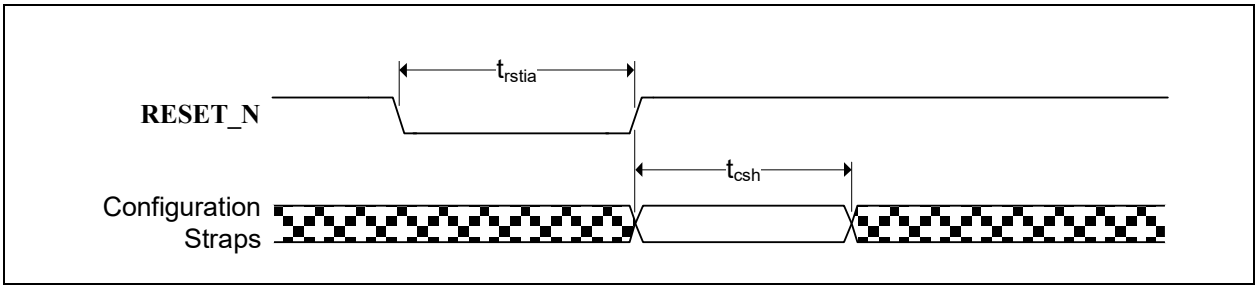

TABLE 9-6: RESET_N CONFIGURATION STRAP TIMING

Symbol	Description	Min	Typ	Max	Units
t_{rstia}	**RESET_N** input assertion time	5			µs
t_{csh}	Configuration strap pins hold after **RESET_N** deassertion	1			ms

Note: The clock input must be stable prior to **RESET_N** deassertion.

Configuration strap latching and output drive timings shown assume that the Power-On reset has finished first otherwise the timings in Section 9.6.2, Power-On and Configuration Strap Timing apply.

9.6.4 POWER-ON OR RESET TO SMBUS SLAVE READY TIMING

Figure 9-5 illustrates the SMBus Slave interface readiness in relation to power-on or de-assertion of **RESET_N**. In order to ensure reliable SMBus slave operation, the SMBus master must allow the bus to remain idle until t_{SMBUS_RDY} timing has been met. The operational levels (V_{opp}) for the external power supplies are detailed in Section 9.2, Operating Conditions**.

FIGURE 9-5: POWER-ON OR RESET TO SMBUS SLAVE READY TIMING

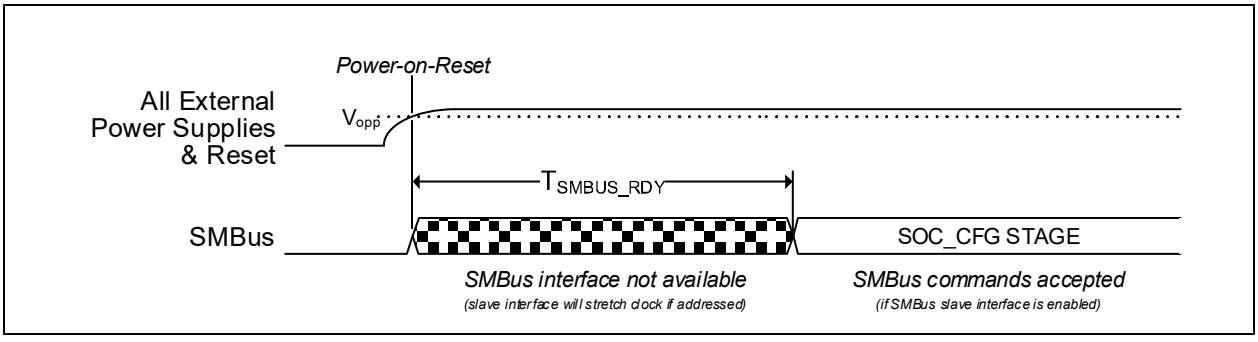

TABLE 9-7: POWER-ON OR RESET TO SMBUS SLAVE READY TIMING

Symbol	Description	Min	Typ	Max	Units
t_{SMBUS_RDY}	Power-on or **RESET_N** deassertion to SMBus ready	40			ms

© 2018 - 2020 Microchip Technology Inc.

9.6.5 USB ATTACH COMMAND TO SMBUS SLAVE READY TIMING

Figure 9-6 illustrates the SMBus Slave interface readiness in relation to ACK of the Slave interface to the "USB Attach with SMBus Runtime Access" (AA56h) from the SMBus Master. In order to ensure reliable SMBus slave operation, the SMBus master must allow the bus to remain idle after issuing the "USB Attach with SMBus Runtime Access" until t_{ATTACH_RDY} timing has been met.

Note:	When accessing SMBus during runtime, it is critical to force some clocks to stay on. If this step is not taken, the SMBus slave interface will not be accessible while the hub is placed into a Suspend state by the host.

FIGURE 9-6: USB ATTACH COMMAND TO SMBUS SLAVE READY TIMING

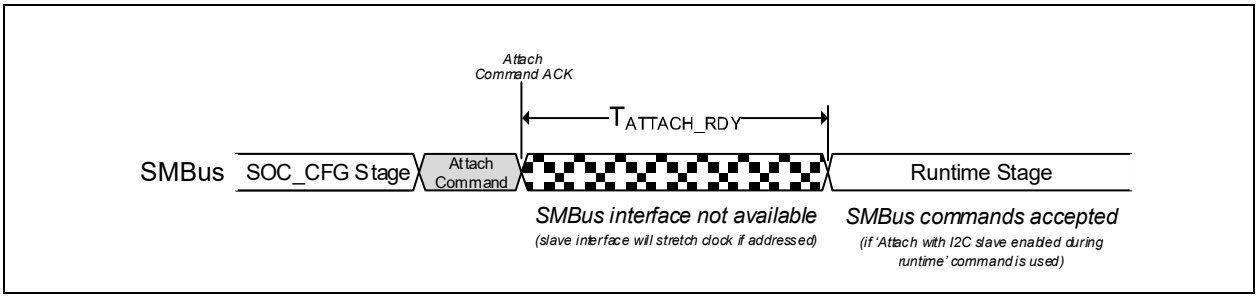

TABLE 9-8: USB ATTACH COMMAND TO SMBUS SLAVE READY TIMING

Symbol	Description	Min	Typ	Max	Units
t_{ATTACH_RDY}	USB Attach command to SMBus ready (Note 6)	11.5			ms

Note 6: The t_{ATTACH_RDY} values are preliminary and subject to change.

9.6.6 USB TIMING

All device USB signals conform to the voltage, power, and timing characteristics/specifications as set forth in the *Universal Serial Bus Specification*. Please refer to the *Universal Serial Bus Revision 3.2 Specification*, available at http://www.usb.org/developers/docs.

9.6.7 SMBUS TIMING

All device SMBus signals conform to the voltage, power, and timing characteristics/specifications as set forth in the *System Management Bus Specification.* Please refer to the *System Management Bus Specification*, Version 1.0, available at http://smbus.org/specs.

9.6.8 I^2C TIMING

All device I^2C signals conform to the 100KHz Standard-mode (Sm) and 400KHz Fast Mode (Fm) voltage, power, and timing characteristics/specifications as set forth in the *I^2C-Bus Specification*. Please refer to the *I^2C-Bus Specification*, available at http://www.nxp.com/documents/user_manual/UM10204.pdf.

9.6.9 I^2S TIMING

All device I^2S signals conform to the voltage, power, and timing characteristics/specifications as set forth in the I^2S-Bus Specification. Please refer to the I^2S-Bus Specification, available at www.sparkfun.com/datasheets/BreakoutBoards/I2SBUS.pdf

9.6.10 SPI/SQI MASTER TIMING

This section specifies the SPI/SQI master timing requirements for the device.

FIGURE 9-7: SPI/SQI MASTER TIMING

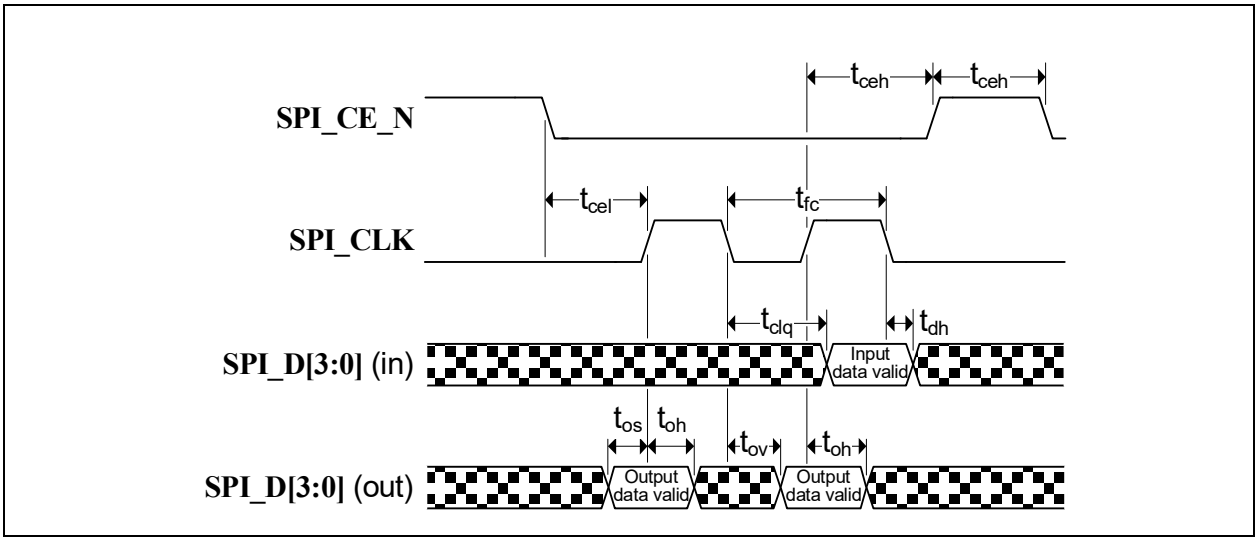

TABLE 9-9: SPI/SQI MASTER TIMING (30 MHZ OPERATION)

Symbol	Description	Min	Typ	Max	Units
t_{fc}	Clock frequency			30	MHz
t_{ceh}	Chip enable (**SPI_CE_N**) high time	100			ns
t_{clq}	Clock to input data			13	ns
t_{dh}	Input data hold time	0			ns
t_{os}	Output setup time	5			ns
t_{oh}	Output hold time	5			ns
t_{ov}	Clock to output valid	4			ns
t_{cel}	Chip enable (**SPI_CE_N**) low to first clock	12			ns
t_{ceh}	Last clock to chip enable (**SPI_CE_N**) high	12			ns

TABLE 9-10: SPI/SQI MASTER TIMING (60 MHZ OPERATION)

Symbol	Description	Min	Typ	Max	Units
t_{fc}	Clock frequency			60	MHz
t_{ceh}	Chip enable (**SPI_CE_N**) high time	50			ns
t_{clq}	Clock to input data			9	ns
t_{dh}	Input data hold time	0			ns
t_{os}	Output setup time	5			ns
t_{oh}	Output hold time	5			ns
t_{ov}	Clock to output valid	4			ns
t_{cel}	Chip enable (**SPI_CE_N**) low to first clock	12			ns
t_{ceh}	Last clock to chip enable (**SPI_CE_N**) high	12			ns

© 2018 - 2020 Microchip Technology Inc.

9.7 Clock Specifications

The device can accept either a 25MHz crystal or a 25MHz single-ended clock oscillator input. If the single-ended clock oscillator method is implemented, **XTALO** should be left unconnected and **XTALI/CLK_IN** should be driven with a nominal 0-3.3V clock signal. The input clock duty cycle is 40% minimum, 50% typical and 60% maximum.

It is recommended that a crystal utilizing matching parallel load capacitors be used for the crystal input/output signals (**XTALI/XTALO**). The following circuit design (Figure 9-8) and specifications (Table 9-11) are required to ensure proper operation.

FIGURE 9-8: 25MHZ CRYSTAL CIRCUIT

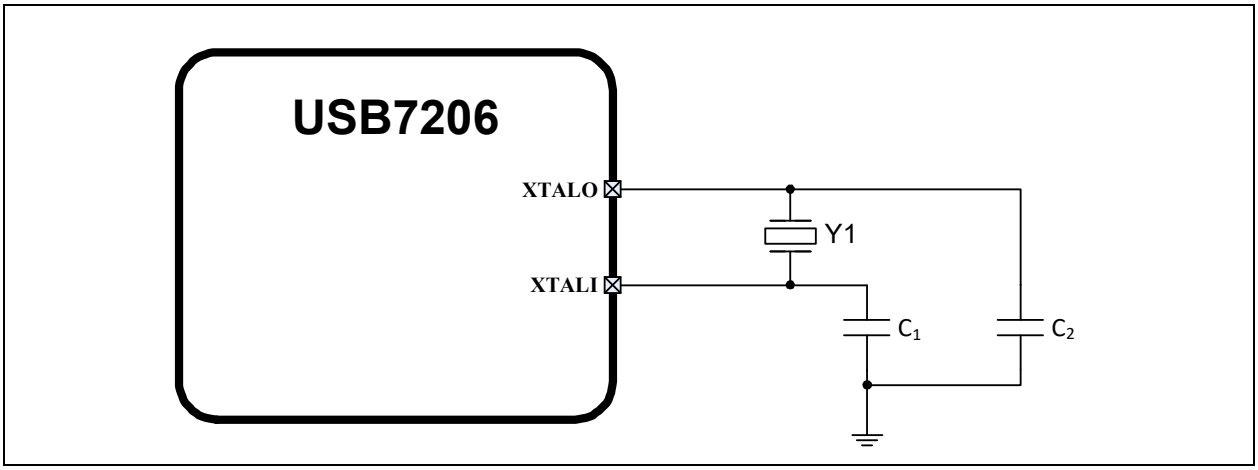

9.7.1 CRYSTAL SPECIFICATIONS

It is recommended that a crystal utilizing matching parallel load capacitors be used for the crystal input/output signals (**XTALI/XTALO**). Refer to Table 9-11 for the recommended crystal specifications.

TABLE 9-11: CRYSTAL SPECIFICATIONS

Parameter	Symbol	Min	Nom	Max	Units	Notes
Crystal Cut			AT, typ			
Crystal Oscillation Mode			Fundamental Mode			
Crystal Calibration Mode			Parallel Resonant Mode			
Frequency	F_{fund}	-	25.000	-	MHz	
Frequency Tolerance @ 25°C	F_{tol}	-	-	±50	PPM	
Frequency Stability Over Temp	F_{temp}	-	-	±50	PPM	
Frequency Deviation Over Time	F_{age}	-	±3 to 5	-	PPM	Note 7
Total Allowable PPM Budget		-	-	±100	PPM	
Shunt Capacitance	C_O	-	7 typ	-	pF	
Load Capacitance	C_L	-	20 typ	-	pF	
Drive Level	P_W	100	-	-	uW	
Equivalent Series Resistance	R_1	-	-	60	Ω	
Operating Temperature Range		Note 8	-	Note 9	°C	
XTALI/CLK_IN Pin Capacitance		-	3 typ	-	pF	Note 10
XTALO Pin Capacitance		-	3 typ	-	pF	Note 10

Note 7: Frequency Deviation Over Time is also referred to as Aging.

Note 8: 0 °C for commercial version, -40 °C for industrial version.

Note 9: +70 °C for commercial version, +85 °C for industrial version.

Note 10: This number includes the pad, the bond wire and the lead frame. PCB capacitance is not included in this value. The **XTALI/CLK_IN** pin, **XTALO** pin and PCB capacitance values are required to accurately calculate the value of the two external load capacitors. These two external load capacitors determine the accuracy of the 25.000 MHz frequency.

9.7.2 EXTERNAL REFERENCE CLOCK (CLK_IN)

When using an external reference clock, the following clock characteristics are required:

- 25 MHz
- 50% duty cycle ±10%, ±100 ppm
- Jitter < 100 ps RMS

© 2018 - 2020 Microchip Technology Inc.

10.0 PACKAGE OUTLINE

10.1 Package Marking Information

100-VQFN (12x12 mm)

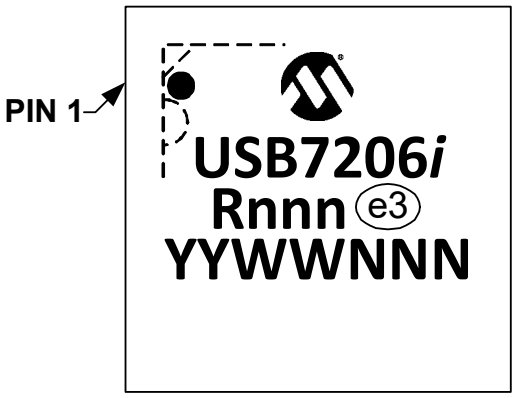

Legend:	*i*	Temperature range designator (Blank = commercial, *i* = industrial)
	R	Product revision
	nnn	Internal code
	e3	Pb-free JEDEC® designator for Matte Tin (Sn)
	YY	Year code (last two digits of calendar year)
	WW	Week code (week of January 1 is week '01')
	NNN	Alphanumeric traceability code

Note: In the event the full Microchip part number cannot be marked on one line, it will be carried over to the next line, thus limiting the number of available characters for customer-specific information.

***** Standard device marking consists of Microchip part number, year code, week code and traceability code. For device marking beyond this, certain price adders apply. Please check with your Microchip Sales Office. For QTP devices, any special marking adders are included in QTP price.

10.2 Package Drawings

Note: For the most current package drawings, see the Microchip Packaging Specification at: http://www.microchip.com/packaging.

FIGURE 10-1: 100-VQFN PACKAGE (DRAWING)

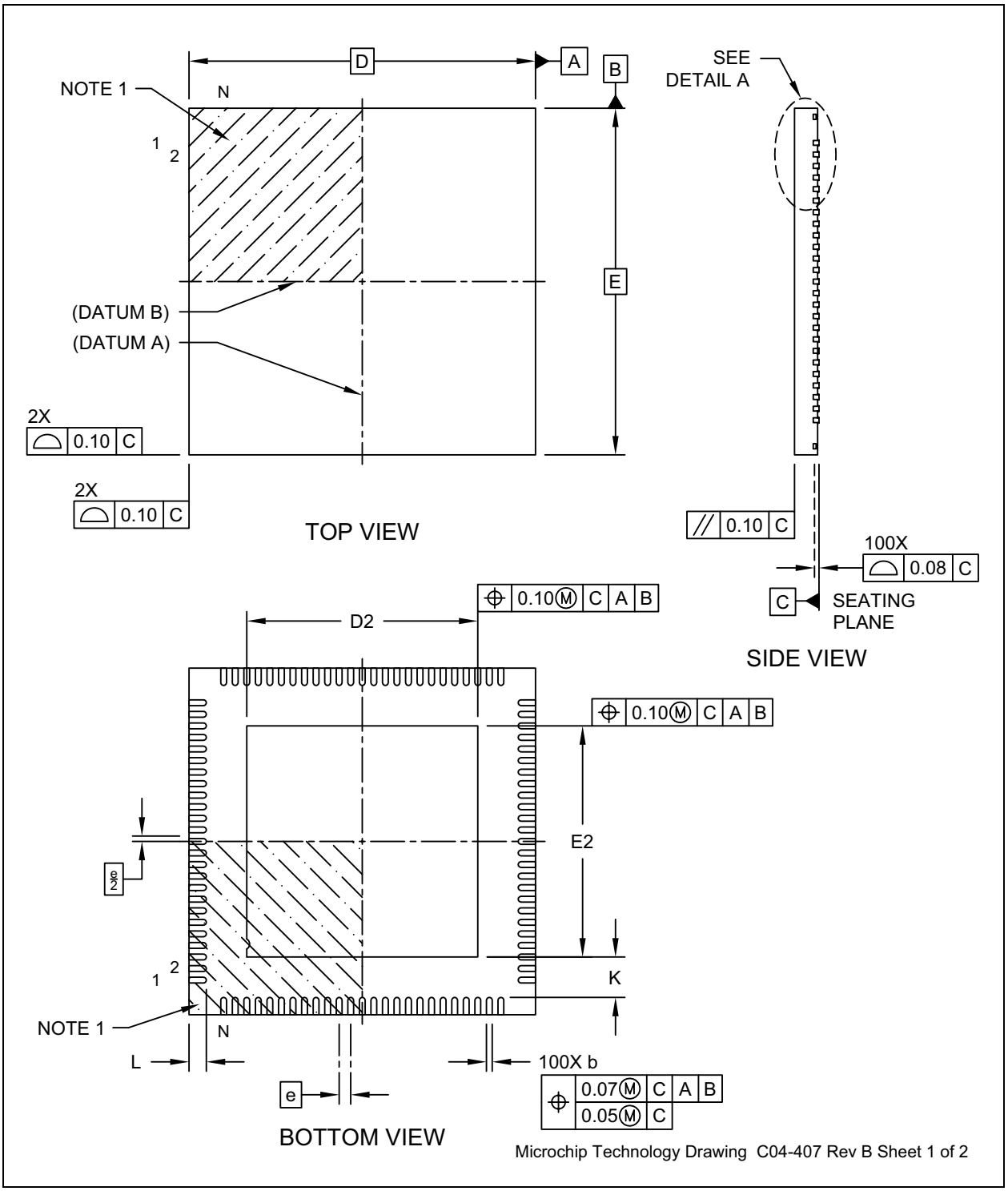

© 2018 - 2020 Microchip Technology Inc.

FIGURE 10-2: 100-VQFN PACKAGE (DIMENSIONS)

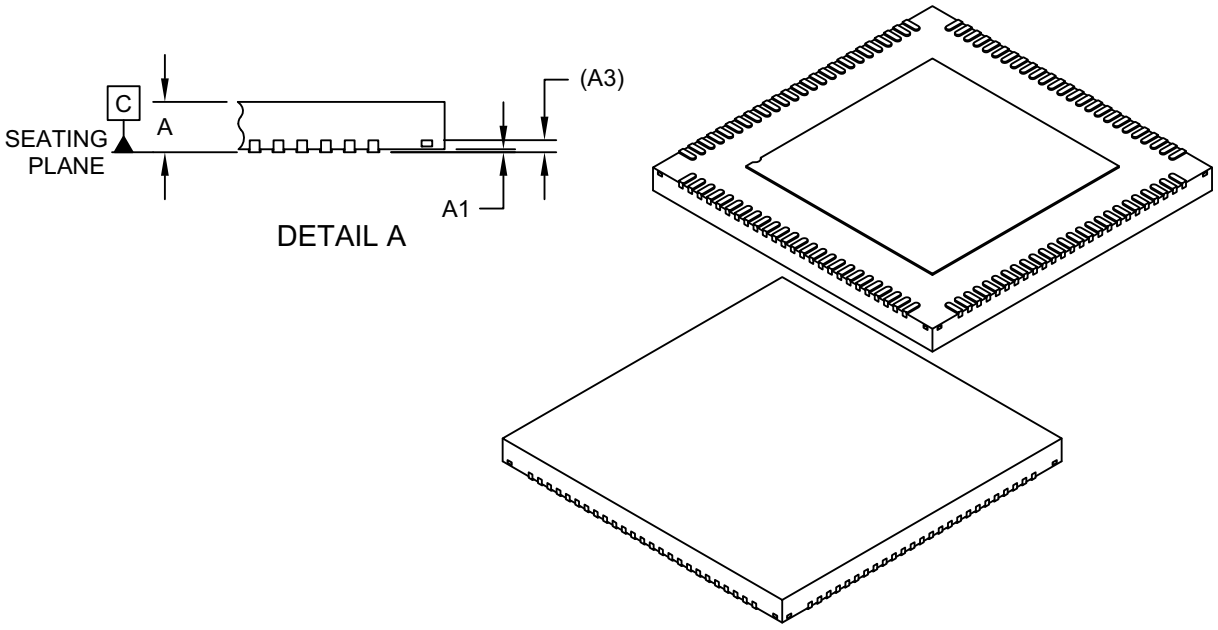

Units		MILLIMETERS		
Dimension Limits		MIN	NOM	MAX
Number of Terminals	N		100	
Pitch	e		0.40 BSC	
Overall Height	A	0.80	0.85	0.90
Standoff	A1	0.00	0.02	0.05
Terminal Thickness	A3		0.203 REF	
Overall Length	D		12.00 BSC	
Exposed Pad Length	D2	7.90	8.00	8.10
Overall Width	E		12.00 BSC	
Exposed Pad Width	E2	7.90	8.00	8.10
Terminal Width	b	0.15	0.20	0.25
Terminal Length	L	0.50	0.60	0.70
Terminal-to-Exposed-Pad	K	1.30	-	-

Notes:

1. Pin 1 visual index feature may vary, but must be located within the hatched area.
2. Package is saw singulated
3. Dimensioning and tolerancing per ASME Y14.5M

   BSC: Basic Dimension. Theoretically exact value shown without tolerances.

   REF: Reference Dimension, usually without tolerance, for information purposes only.

Microchip Technology Drawing C04-407 Rev B Sheet 2 of 2

FIGURE 10-3: 100-VQFN PACKAGE (LAND-PATTERN)

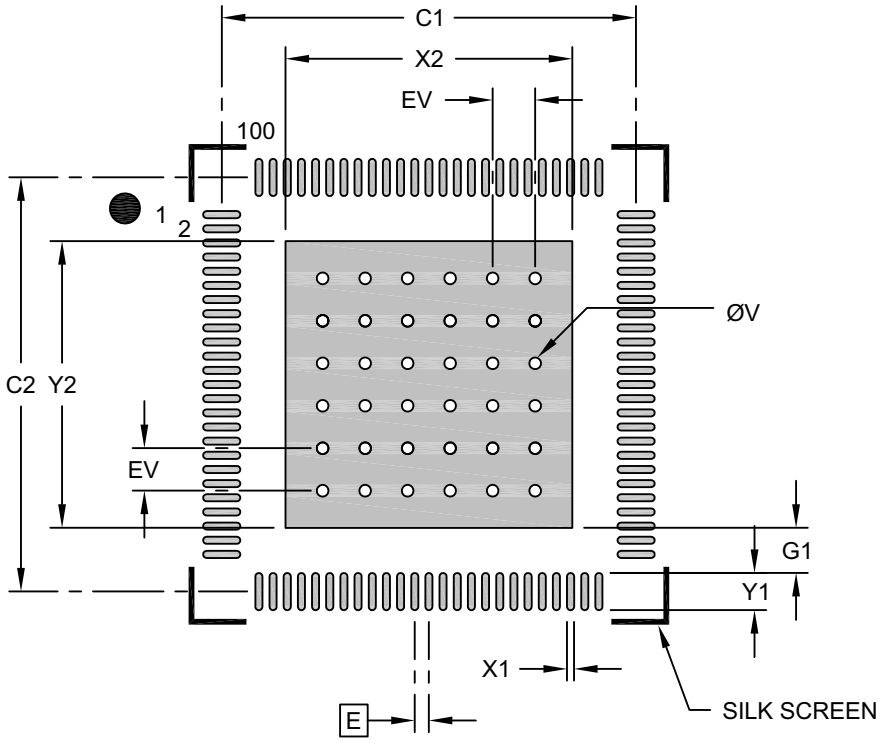

RECOMMENDED LAND PATTERN

Units		MILLIMETERS		
Dimension Limits		MIN	NOM	MAX
Contact Pitch	E		0.40 BSC	
Optional Center Pad Width	X2			8.10
Optional Center Pad Length	Y2			8.10
Contact Pad Spacing	C1		11.70	
Contact Pad Spacing	C2		11.70	
Contact Pad Width (X100)	X1			0.20
Contact Pad Length (X100)	Y1			1.05
Contact Pad to Center Pad (X100)	G1	0.20		
Thermal Via Diameter	V		0.33	
Thermal Via Pitch	EV		1.20	

Notes:

1. Dimensioning and tolerancing per ASME Y14.5M

   BSC: Basic Dimension. Theoretically exact value shown without tolerances.

2. For best soldering results, thermal vias, if used, should be filled or tented to avoid solder loss during reflow process

Microchip Technology Drawing C04-2407A

© 2018 - 2020 Microchip Technology Inc.

APPENDIX A: REVISION HISTORY

TABLE A-1: REVISION HISTORY

Revision Level & Date	Section/Figure/Entry	Correction
DS00002875C (10-20-20)	Cover	• Added bullet: “Programming of firmware image to external SPI memory device from USB host.” • Updated “Configuration programming via OTP ROM...” to “Configuration programming via OTP Memory” • Updated “Enhanced OEM configuration options available through either OTP or SPI ROM” to “Enhanced OEM configuration options available through either OTP or external SPI memory • Updated USB Type-C™ to a registered trademark, USB Type-C®
	All	Updated USB 3.1 references to USB 3.2 per latest USB IF guidelines.
	All (Cover, Section 2.1, General Description, Section 8.4, FlexConnect)	Added FlexConnect information.
	Table 1-2	Added AIO buffer type.
	Section 1.3, Pin Reset States	Added new pin reset state section/table.
	Section 3.1, Pin Assignments	• Added pin reset states to pin table.
	Table 3-1, Pin Descriptions	• Added “If Unused” column and information. •
	Section 3.3.4, PF[31:3] Configuration (CFG_STRAP[2:1])	• Updated PF29 assignment.
	Table 3-6, Programmable Functions Descriptions	• Added pin reset states to programmable function descriptions.
	Section 5.1.7, OTP Configuration Stage (CFG_OTP)	Added note.
	Section 7.1, SPI/SQI Master Interface	Added new second paragraph.
	Section 8.2.1, Port Power Control using USB Power Switch	Added note after first paragraph.
	Section 8.2.2, Port Power Control using Poly Fuse	Added note after first paragraph.
	Section 8.4, FlexConnect	Updated note.
	Section 9.1, Absolute Maximum Ratings*	Added HBM ESD information.

TABLE A-1: REVISION HISTORY (CONTINUED)

Revision Level & Date	Section/Figure/Entry	Correction
	Section 9.2, Operating Conditions**	• Revised Digital Code and 3.3V supply voltage rise times. • Added note under Figure 9-1
	Section 9.4, Power Consumption	Updated power consumption data.
	Section 9.5, DC Specifications	• Updated I type buffer V_{IL} and V_{IH} values. • Updated ICLK buffer type V_{IH} values.
	Section 9.6.1, Power Supply and RESET_N Sequence Timing	Updated description.
	Section 9.6.4, Power-On or Reset to SMBus Slave Ready Timing and Section 9.6.5, USB Attach Command to SMBus Slave Ready Timing	Added new sections.
DS00002875B (11-01-19)	Section 1.4, Reference Documents	Corrected I2S link
	Cover	Updated Highlight bullets to include “Gen 2” in description of Type-C support.
	All	Updated all “VDD11” and “+1.1V” references to “VCORE” for consistency and clarity. Updated VCORE pin description.
	Section 9.4, Power Consumption	Added power numbers.
	Section 10.1, Package Marking Information	Added package marking information.
	Table 3-4, Table 3-5	Changed “Configuration 1” references to “Configuration 3”. Added note under table indicating Configuration 1 and 2 are not used in the USB7206.
	Section 3.2, Pin Descriptions	Updated **VBUS_DET** description with additional voltage divider information and figure.
	Section 3.4, Physical and Logical Port Mapping	Added new section with physical and logical port mapping.
	Figure 2-1	Updated internal PHY numbering to match physical port numbering detailed in new Section 3.4, Physical and Logical Port Mapping.
	Section 2.1, General Description	Corrected Port Split description to indicate support on ports 3, 4, and 5.
	Section 9.6.1, Power Supply and RESET_N Sequence Timing	Clarified section and added links to the rise time information in Section 9.2, Operating Conditions**.
	Section 9.7.2, External Reference Clock (CLK_IN)	Clarified first sentence.
	Section 9.6.9, I2S Timing	Corrected hyperlink.
DS00002875A (01-15-19)	All	Initial Release

© 2018 - 2020 Microchip Technology Inc.

PRODUCT IDENTIFICATION SYSTEM

To order or obtain information, e.g., on pricing or delivery, refer to the factory or the listed sales office.

PART NO.	[X](1)	-	[X]	/	XXX
Device	Tape and Reel Option		Temperature Range		Package

Device:	USB7206	
Tape and Reel Option:	Blank T	= Standard packaging (tray) = Tape and Reel (Note 1)
Temperature Range:	Blank = 0°C to +70°C (Commercial) I = -40°C to +85°C (Industrial)	
Package:	KDX =	100-pin VQFN

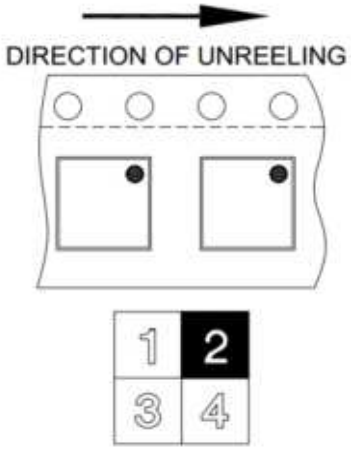

Examples:

a) USB7206/KDX
Tray, 0°C to +70°C, 100-pin VQFN

b) USB7206T/KDX
Tape & reel, 0°C to +70°C, 100-pin VQFN

c) USB7206-I/KDX
Tray, -40°C to +85°C, 100-pin VQFN

d) USB7206T-I/KDX
Tape & reel, -40°C to +85°C, 100-pin VQFN

Note 1: Tape and Reel identifier only appears in the catalog part number description. This identifier is used for ordering purposes and is not printed on the device package. Check with your Microchip Sales Office for package availability with the Tape and Reel option.

THE MICROCHIP WEB SITE

Microchip provides online support via our WWW site at www.microchip.com. This web site is used as a means to make files and information easily available to customers. Accessible by using your favorite Internet browser, the web site contains the following information:

- **Product Support** – Data sheets and errata, application notes and sample programs, design resources, user's guides and hardware support documents, latest software releases and archived software
- **General Technical Support** – Frequently Asked Questions (FAQ), technical support requests, online discussion groups, Microchip consultant program member listing
- **Business of Microchip** – Product selector and ordering guides, latest Microchip press releases, listing of seminars and events, listings of Microchip sales offices, distributors and factory representatives

CUSTOMER CHANGE NOTIFICATION SERVICE

Microchip's customer notification service helps keep customers current on Microchip products. Subscribers will receive e-mail notification whenever there are changes, updates, revisions or errata related to a specified product family or development tool of interest.

To register, access the Microchip web site at www.microchip.com. Under "Support", click on "Customer Change Notification" and follow the registration instructions.

CUSTOMER SUPPORT

Users of Microchip products can receive assistance through several channels:

- Distributor or Representative
- Local Sales Office
- Field Application Engineer (FAE)
- Technical Support

Customers should contact their distributor, representative or Field Application Engineer (FAE) for support. Local sales offices are also available to help customers. A listing of sales offices and locations is included in the back of this document.

Technical support is available through the web site at: http://microchip.com/support

© 2018 - 2020 Microchip Technology Inc.

Note the following details of the code protection feature on Microchip devices:

- Microchip products meet the specifications contained in their particular Microchip Data Sheet.
- Microchip believes that its family of products is secure when used in the intended manner and under normal conditions.
- There are dishonest and possibly illegal methods being used in attempts to breach the code protection features of the Microchip devices. We believe that these methods require using the Microchip products in a manner outside the operating specifications contained in Microchip's Data Sheets. Attempts to breach these code protection features, most likely, cannot be accomplished without violating Microchip's intellectual property rights.
- Microchip is willing to work with any customer who is concerned about the integrity of its code.
- Neither Microchip nor any other semiconductor manufacturer can guarantee the security of its code. Code protection does not mean that we are guaranteeing the product is "unbreakable." Code protection is constantly evolving. We at Microchip are committed to continuously improving the code protection features of our products. Attempts to break Microchip's code protection feature may be a violation of the Digital Millennium Copyright Act. If such acts allow unauthorized access to your software or other copyrighted work, you may have a right to sue for relief under that Act.

Information contained in this publication is provided for the sole purpose of designing with and using Microchip products. Information regarding device applications and the like is provided only for your convenience and may be superseded by updates. It is your responsibility to ensure that your application meets with your specifications.

THIS INFORMATION IS PROVIDED BY MICROCHIP "AS IS". MICROCHIP MAKES NO REPRESENTATIONS OR WARRANTIES OF ANY KIND WHETHER EXPRESS OR IMPLIED, WRITTEN OR ORAL, STATUTORY OR OTHERWISE, RELATED TO THE INFORMATION INCLUDING BUT NOT LIMITED TO ANY IMPLIED WARRANTIES OF NON-INFRINGEMENT, MERCHANTABILITY, AND FITNESS FOR A PARTICULAR PURPOSE OR WARRANTIES RELATED TO ITS CONDITION, QUALITY, OR PERFORMANCE.

IN NO EVENT WILL MICROCHIP BE LIABLE FOR ANY INDIRECT, SPECIAL, PUNITIVE, INCIDENTAL OR CONSEQUENTIAL LOSS, DAMAGE, COST OR EXPENSE OF ANY KIND WHATSOEVER RELATED TO THE INFORMATION OR ITS USE, HOWEVER CAUSED, EVEN IF MICROCHIP HAS BEEN ADVISED OF THE POSSIBILITY OR THE DAMAGES ARE FORESEEABLE. TO THE FULLEST EXTENT ALLOWED BY LAW, MICROCHIP'S TOTAL LIABILITY ON ALL CLAIMS IN ANY WAY RELATED TO THE INFORMATION OR ITS USE WILL NOT EXCEED THE AMOUNT OF FEES, IF ANY, THAT YOU HAVE PAID DIRECTLY TO MICROCHIP FOR THE INFORMATION. Use of Microchip devices in life support and/or safety applications is entirely at the buyer's risk, and the buyer agrees to defend, indemnify and hold harmless Microchip from any and all damages, claims, suits, or expenses resulting from such use. No licenses are conveyed, implicitly or otherwise, under any Microchip intellectual property rights unless otherwise stated.

Trademarks

The Microchip name and logo, the Microchip logo, Adaptec, AnyRate, AVR, AVR logo, AVR Freaks, BesTime, BitCloud, chipKIT, chipKIT logo, CryptoMemory, CryptoRF, dsPIC, FlashFlex, flexPWR, HELDO, IGLOO, JukeBlox, KeeLoq, Kleer, LANCheck, LinkMD, maXStylus, maXTouch, MediaLB, megaAVR, Microsemi, Microsemi logo, MOST, MOST logo, MPLAB, OptoLyzer, PackeTime, PIC, picoPower, PICSTART, PIC32 logo, PolarFire, Prochip Designer, QTouch, SAM-BA, SenGenuity, SpyNIC, SST, SST Logo, SuperFlash, Symmetricom, SyncServer, Tachyon, TimeSource, tinyAVR, UNI/O, Vectron, and XMEGA are registered trademarks of Microchip Technology Incorporated in the U.S.A. and other countries.

AgileSwitch, APT, ClockWorks, The Embedded Control Solutions Company, EtherSynch, FlashTec, Hyper Speed Control, HyperLight Load, IntelliMOS, Libero, motorBench, mTouch, Powermite 3, Precision Edge, ProASIC, ProASIC Plus, ProASIC Plus logo, Quiet-Wire, SmartFusion, SyncWorld, Temux, TimeCesium, TimeHub, TimePictra, TimeProvider, WinPath, and ZL are registered trademarks of Microchip Technology Incorporated in the U.S.A.

Adjacent Key Suppression, AKS, Analog-for-the-Digital Age, Any Capacitor, AnyIn, AnyOut, Augmented Switching, BlueSky, BodyCom, CodeGuard, CryptoAuthentication, CryptoAutomotive, CryptoCompanion, CryptoController, dsPICDEM, dsPICDEM.net, Dynamic Average Matching, DAM, ECAN, Espresso T1S, EtherGREEN, IdealBridge, In-Circuit Serial Programming, ICSP, INICnet, Intelligent Paralleling, Inter-Chip Connectivity, JitterBlocker, maxCrypto, maxView, memBrain, Mindi, MiWi, MPASM, MPF, MPLAB Certified logo, MPLIB, MPLINK, MultiTRAK, NetDetach, Omniscient Code Generation, PICDEM, PICDEM.net, PICkit, PICtail, PowerSmart, PureSilicon, QMatrix, REAL ICE, Ripple Blocker, RTAX, RTG4, SAM-ICE, Serial Quad I/O, simpleMAP, SimpliPHY, SmartBuffer, SMART-I.S., storClad, SQI, SuperSwitcher, SuperSwitcher II, Switchtec, SynchroPHY, Total Endurance, TSHARC, USBCheck, VariSense, VectorBlox, VeriPHY, ViewSpan, WiperLock, XpressConnect, and ZENA are trademarks of Microchip Technology Incorporated in the U.S.A. and other countries.

SQTP is a service mark of Microchip Technology Incorporated in the U.S.A.

The Adaptec logo, Frequency on Demand, Silicon Storage Technology, and Symmcom are registered trademarks of Microchip Technology Inc. in other countries.

GestIC is a registered trademark of Microchip Technology Germany II GmbH & Co. KG, a subsidiary of Microchip Technology Inc., in other countries.

All other trademarks mentioned herein are property of their respective companies.

© 2018 - 2020, Microchip Technology Incorporated, All Rights Reserved.

ISBN: 9781522463535

For information regarding Microchip's Quality Management Systems, please visit www.microchip.com/quality.

Worldwide Sales and Service

AMERICAS

Corporate Office
2355 West Chandler Blvd.
Chandler, AZ 85224-6199
Tel: 480-792-7200
Fax: 480-792-7277
Technical Support:
http://www.microchip.com/support
Web Address:
www.microchip.com

Atlanta
Duluth, GA
Tel: 678-957-9614
Fax: 678-957-1455

Austin, TX
Tel: 512-257-3370

Boston
Westborough, MA
Tel: 774-760-0087
Fax: 774-760-0088

Chicago
Itasca, IL
Tel: 630-285-0071
Fax: 630-285-0075

Dallas
Addison, TX
Tel: 972-818-7423
Fax: 972-818-2924

Detroit
Novi, MI
Tel: 248-848-4000

Houston, TX
Tel: 281-894-5983

Indianapolis
Noblesville, IN
Tel: 317-773-8323
Fax: 317-773-5453
Tel: 317-536-2380

Los Angeles
Mission Viejo, CA
Tel: 949-462-9523
Fax: 949-462-9608
Tel: 951-273-7800

Raleigh, NC
Tel: 919-844-7510

New York, NY
Tel: 631-435-6000

San Jose, CA
Tel: 408-735-9110
Tel: 408-436-4270

Canada - Toronto
Tel: 905-695-1980
Fax: 905-695-2078

ASIA/PACIFIC

Australia - Sydney
Tel: 61-2-9868-6733

China - Beijing
Tel: 86-10-8569-7000

China - Chengdu
Tel: 86-28-8665-5511

China - Chongqing
Tel: 86-23-8980-9588

China - Dongguan
Tel: 86-769-8702-9880

China - Guangzhou
Tel: 86-20-8755-8029

China - Hangzhou
Tel: 86-571-8792-8115

China - Hong Kong SAR
Tel: 852-2943-5100

China - Nanjing
Tel: 86-25-8473-2460

China - Qingdao
Tel: 86-532-8502-7355

China - Shanghai
Tel: 86-21-3326-8000

China - Shenyang
Tel: 86-24-2334-2829

China - Shenzhen
Tel: 86-755-8864-2200

China - Suzhou
Tel: 86-186-6233-1526

China - Wuhan
Tel: 86-27-5980-5300

China - Xian
Tel: 86-29-8833-7252

China - Xiamen
Tel: 86-592-2388138

China - Zhuhai
Tel: 86-756-3210040

ASIA/PACIFIC

India - Bangalore
Tel: 91-80-3090-4444

India - New Delhi
Tel: 91-11-4160-8631

India - Pune
Tel: 91-20-4121-0141

Japan - Osaka
Tel: 81-6-6152-7160

Japan - Tokyo
Tel: 81-3-6880- 3770

Korea - Daegu
Tel: 82-53-744-4301

Korea - Seoul
Tel: 82-2-554-7200

Malaysia - Kuala Lumpur
Tel: 60-3-7651-7906

Malaysia - Penang
Tel: 60-4-227-8870

Philippines - Manila
Tel: 63-2-634-9065

Singapore
Tel: 65-6334-8870

Taiwan - Hsin Chu
Tel: 886-3-577-8366

Taiwan - Kaohsiung
Tel: 886-7-213-7830

Taiwan - Taipei
Tel: 886-2-2508-8600

Thailand - Bangkok
Tel: 66-2-694-1351

Vietnam - Ho Chi Minh
Tel: 84-28-5448-2100

EUROPE

Austria - Wels
Tel: 43-7242-2244-39
Fax: 43-7242-2244-393

Denmark - Copenhagen
Tel: 45-4485-5910
Fax: 45-4485-2829

Finland - Espoo
Tel: 358-9-4520-820

France - Paris
Tel: 33-1-69-53-63-20
Fax: 33-1-69-30-90-79

Germany - Garching
Tel: 49-8931-9700

Germany - Haan
Tel: 49-2129-3766400

Germany - Heilbronn
Tel: 49-7131-72400

Germany - Karlsruhe
Tel: 49-721-625370

Germany - Munich
Tel: 49-89-627-144-0
Fax: 49-89-627-144-44

Germany - Rosenheim
Tel: 49-8031-354-560

Israel - Ra'anana
Tel: 972-9-744-7705

Italy - Milan
Tel: 39-0331-742611
Fax: 39-0331-466781

Italy - Padova
Tel: 39-049-7625286

Netherlands - Drunen
Tel: 31-416-690399
Fax: 31-416-690340

Norway - Trondheim
Tel: 47-7288-4388

Poland - Warsaw
Tel: 48-22-3325737

Romania - Bucharest
Tel: 40-21-407-87-50

Spain - Madrid
Tel: 34-91-708-08-90
Fax: 34-91-708-08-91

Sweden - Gothenberg
Tel: 46-31-704-60-40

Sweden - Stockholm
Tel: 46-8-5090-4654

UK - Wokingham
Tel: 44-118-921-5800
Fax: 44-118-921-5820

© 2018 - 2020 Microchip Technology Inc.