REVISIONS				
EC NO	DATE	REV	DESCRIPTION	CHANGER
	2016.12.13	A	INITIAL RELEASE.	DICK

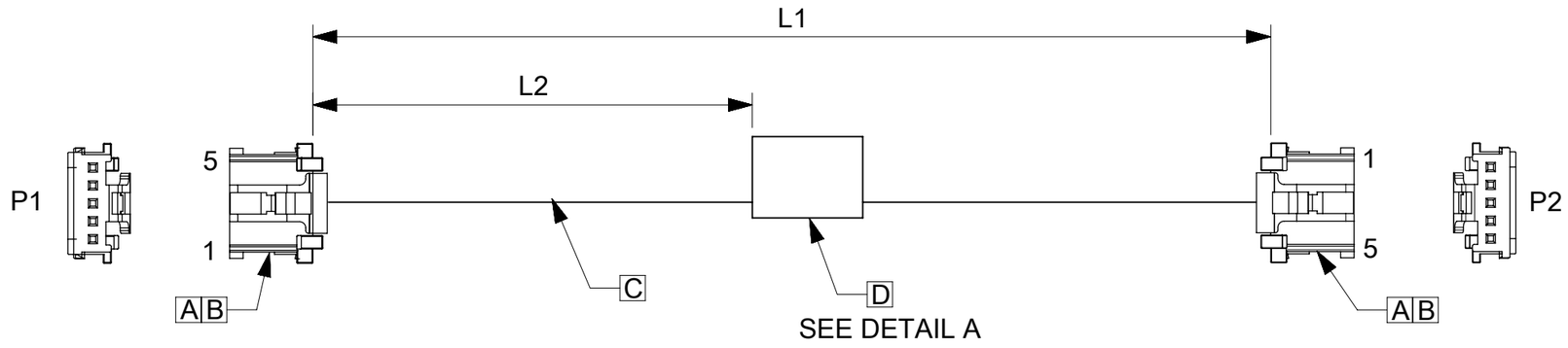

TABLE			
PART NUMBER	L1	L2	TITLE
151360500	50±5	18REF	MicroClasp 5Circuit 50MM
151360501	100±8	44REF	MicroClasp 5Circuit 100MM
151360502	150±10	69REF	MicroClasp 5Circuit 150MM
151360503	300±10	144REF	MicroClasp 5Circuit 300MM
151360505	450±15	219REF	MicroClasp 5Circuit 450MM
151360506	600±15	294REF	MicroClasp 5Circuit 600MM

P/N:15136XXXX — MOLEX PN
MOLEX

DETAIL A

NOTES
1. THIS PRODUCT MUST MEET 2011/65/EU ROHS COMPLIANCE.
此产品需符合 2011/65/EU ROHS环保要求.
2. ELECTRICAL PERFORMANCE REFER TO ES-000.
电气特性参考ES-000.
3. LABEL TEXT MUST BE 2mm MAX. IN HEIGHT WITH ARIAL FONT.
标签字高最大2mm,字体ARIAL.

WIRING CHART		
P1	P2	COLOR
1	5	BLACK
2	4	BLACK
3	3	BLACK
4	2	BLACK
5	1	BLACK

ITEM	DESCRIPTION	L(MM)	Q'TY
D	Blank label 12.7x35.5mm (WHT:12.7mm) HF		1
C	UL&CSA 1061/#22 STR BLK	A/R	
B	2.0 WtB Crimp Rec Chn, Tin plating		10
A	2.0 WtB Hsg 5Ckt		2

QUALITY SYMBOLS
FA = 0
FC = 0
FD = 0
▼ = 0
C = 0
☒ = 0
■ = 0
C = 0

THIS DRAWING CONTAINS INFORMATION THAT IS PROPRIETARY TO MOLEX ELECTRONIC TECHNOLOGIES, LLC AND SHOULD NOT BE USED WITHOUT WRITTEN PERMISSION

EC NO: 111611 2016/12/13
DRWN: WLXIE 2016/12/16
CHK'D: DHUANG16 2016/12/19
APPR: YXZOU

REV: A

GENERAL TOLERANCES (UNLESS SPECIFIED)
ANGULAR TOL ± °
4 PLACES ±
3 PLACES ±
2 PLACES ±
1 PLACE ±
0 PLACES ±
DRAFT WHERE APPLICABLE MUST REMAIN WITHIN DIMENSIONS

DIMENSION UNITS: MM
SCALE: NTS
DRWN BY: XJGUO01 DATE: 2016/11/23
CHK'D BY: DHUANG16 DATE: 2016/12/13
APPR BY: YXZOU DATE: 2016/12/19
DRAWING SIZE: A3
THIRD ANGLE PROJECTION

molex®

SEE TABLE

PRODUCT CUSTOMER DRAWING

SERIES	MATERIAL NUMBER	CUSTOMER
201234	SEE TABLE	GENERAL MARKET

DOCUMENT NUMBER	DOC TYPE	DOC PART	SHEET NUMBER
2012341708	PSD	000	1 OF 1

RELEASE STATUS	ER	RELEASE DATE	16.12.2016 11:04:40

FORMAT: master-tb-prod-A3
REVISION: D
DATE: 2015/12/14