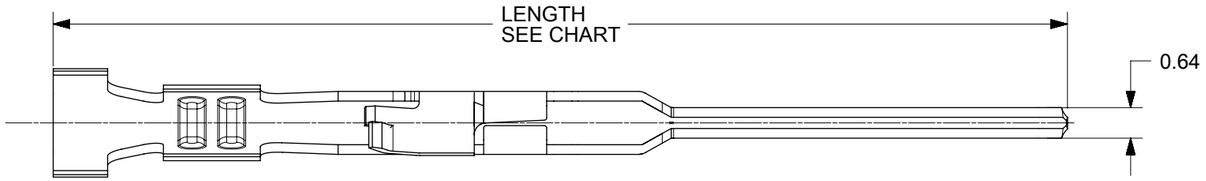

NOTES:
1. MATERIAL: 0.20 THICK PHOS BRONZE
2. FINISH:
   OVERALL TIN: 3.8 MICROMETERS MIN OVER NICKEL
   207 = SELECT GOLD IN AREA SHOWN: 0.38 MICROMETERS MIN
   SELECT TIN IN AREA SHOWN: 2.0 MICROMETERS MIN BOTH OVER NICKEL
   206 = SELECT GOLD IN AREA SHOWN: 0.75 MICROMETERS MIN
   SELECT TIN IN AREA SHOWN: 2.0 MICROMETERS MIN BOTH OVER NICKEL
3. PRODUCT SPECIFICATION: PS-70021
4. TERMINALS FOR USE WITH HOUSING SERIES: 70066 AND 70107

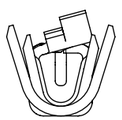

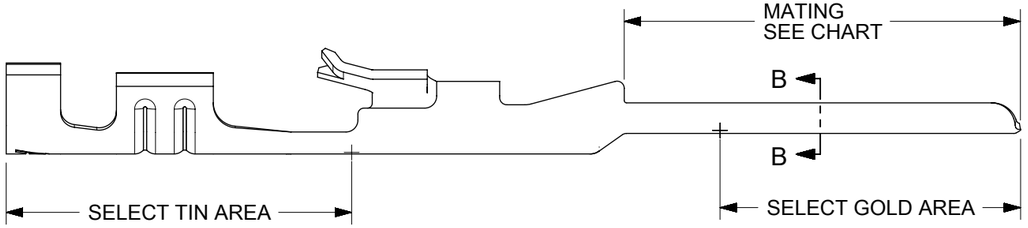

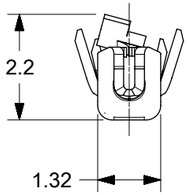

SECTION B-B
BACKGROUND
OMITTED

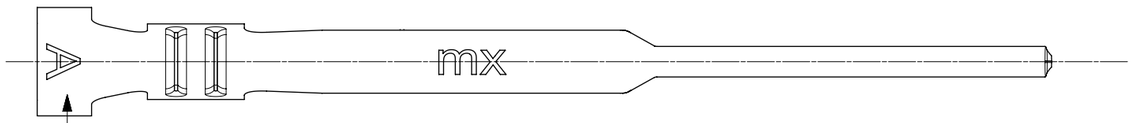

WIRE SIZE IDENTIFICATION
LETTER IS STAMPED INTO
PART IN THIS AREA:
A = 24-30 AWG WIRE WITH 1.52 MAX INSULATION DIA
B = 32-36 AWG WIRE WITH 0.64 MAX INSULATION DIA
C = 22-24 AWG WIRE WITH 1.63 MAX INSULATION DIA
SEE CHART

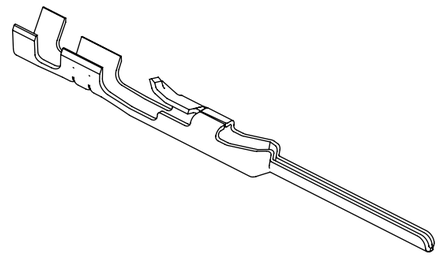

SYMBOLS	THIS DRAWING CONTAINS INFORMATION THAT IS PROPRIETARY TO MOLEX ELECTRONIC TECHNOLOGIES, LLC AND SHOULD NOT BE USED WITHOUT WRITTEN PERMISSION			
= 0	DIMENSION UNITS: mm	SCALE: 5:1	CURRENT REV DESC: ADD PK SPEC	molex
= 0	GENERAL TOLERANCES (UNLESS SPECIFIED)			SL MALE CRIMP TERMINAL
= 0	ANGULAR TOL ± °		EC NO: 615128	PRODUCT CUSTOMER DRAWING
= 0	4 PLACES ±		DRWN: GJEEVANSURES 2018/12/05	DOCUMENT NUMBER: 700210000-SD; DOC TYPE: PSD; DOC PART: 000; REVISION: A5
= 0	3 PLACES ±		CHK'D: SCS02 2019/04/05	
= 0	2 PLACES ± 0.25		APPR: ISHWARG 2019/04/05	
= 0	1 PLACE ± 0.35		INITIAL REVISION:	
= 0	0 PLACES ± 0.0		DRWN: KSAMIEC 2017/09/01	
= 0	DRAFT WHERE APPLICABLE MUST REMAIN WITHIN DIMENSIONS		APPR: FSMITH 2017/09/12	
			THIRD ANGLE PROJECTION; DRAWING: B-SIZE; SERIES: 70021	MATERIAL NUMBER; CUSTOMER; SHEET NUMBER: 1 OF 2

DOCUMENT STATUS	P1	RELEASE DATE	2019/04/05 09:02:33

FORMAT: master-B-prod
REVISION: H
DATE: 2018/01/18

TERMINAL STAMPED WITH LETTER "A" FOR USE WITH 24-30 AWG WIRE

MATERIAL NO	ENGINEERING NO	PACKING	PLATING	LENGTH	MATING	STAMPED LETTER	WIRE SIZE	MAX INS. DIA
16020105	70021-0004	REEL	OVERALL TIN	21.39	8.43	A	24-30 AWG	1.52
16020108	70021-0204	LOOSE						
16020077	70021-0006	REEL	207 = 0.38 GOLD					
16020109	70021-0206	LOOSE						
16020078	70021-0008	REEL	206 = 0.75 GOLD					
16020110	70021-0208	LOOSE						

TERMINAL STAMPED WITH LETTER "B" FOR USE WITH 32-36 AWG WIRE

MATERIAL NO	ENGINEERING NO	PACKING	PLATING	LENGTH	MATING	STAMPED LETTER	WIRE SIZE	MAX INS. DIA
16020106	70021-0013	REEL	OVERALL TIN	21.39	8.43	B	32-36 AWG	0.64
16020111	70021-0213	LOOSE						
16020079	70021-0015	REEL	207 = 0.38 GOLD					
16020112	70021-0215	LOOSE						
16020080	70021-0017	REEL	206 = 0.75 GOLD					
16020113	70021-0217	LOOSE						

TERMINAL STAMPED WITH LETTER "C" FOR USE WITH 22-24 AWG WIRE

MATERIAL NO	ENGINEERING NO	PACKING	PLATING	LENGTH	MATING	STAMPED LETTER	WIRE SIZE	MAX INS. DIA
16020107	70021-0021	REEL	OVERALL TIN	21.39	8.43	C	22-24 AWG	1.63
16020114	70021-0221	LOOSE						
16020081	70021-0023	REEL	207 = 0.38 GOLD					
16020115	70021-0223	LOOSE						
16020116	70021-0025	REEL	206 = 0.75 GOLD					
16020117	70021-0225	LOOSE						
700210117	70021-0117							
700210081	NA	NA	207 = 0.38 GOLD					
700211021	NA	NA	OVERALL TIN	19.61	6.65			
700211023	NA	REEL	206 = 0.75 GOLD					

REELED PART PACKAGING

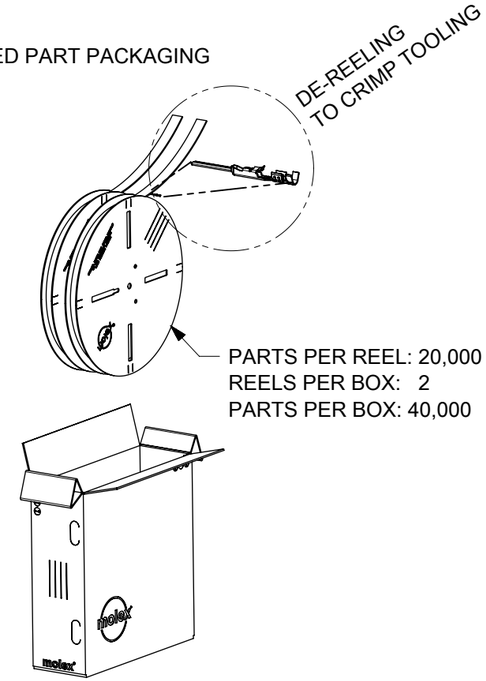

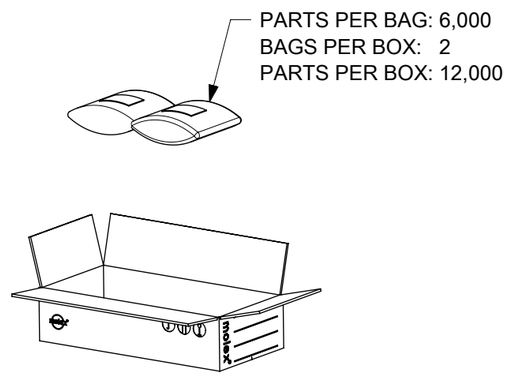

LOOSE PART PACKAGING

SYMBOLS	
FA = 0	
FC = 0	
FB = 0	
S = 0	
▼ = 0	
C = 0	
☒ = 0	
■ = 0	
V = 0	

THIS DRAWING CONTAINS INFORMATION THAT IS PROPRIETARY TO MOLEX ELECTRONIC TECHNOLOGIES, LLC AND SHOULD NOT BE USED WITHOUT WRITTEN PERMISSION

DIMENSION UNITS	SCALE
mm	1:10

GENERAL TOLERANCES (UNLESS SPECIFIED)

ANGULAR TOL	±	°
4 PLACES	±	
3 PLACES	±	
2 PLACES	±	0.25
1 PLACE	±	0.35
0 PLACES	±	0.0

DRAFT WHERE APPLICABLE MUST REMAIN WITHIN DIMENSIONS

CURRENT REV DESC: ADD PK SPEC

EC NO: 615128
DRWN: GJEEVANSURES 2018/12/05
CHK'D: SCS02 2019/04/05
APPR: ISHWARG 2019/04/05

INITIAL REVISION:
DRWN: KSAMIEC 2017/09/01
APPR: FSMITH 2017/09/12

THIRD ANGLE PROJECTION | DRAWING: B-SIZE | SERIES: 70021

molex

SL MALE CRIMP TERMINAL

PRODUCT CUSTOMER DRAWING

DOCUMENT NUMBER	DOC TYPE	DOC PART	REVISION
700210000-SD	PSD	000	A5

MATERIAL NUMBER | CUSTOMER | SHEET NUMBER: 2 OF 2

DOCUMENT STATUS	P1	RELEASE DATE	2019/04/05 09:02:33

FORMAT: master-tb-prod
REVISION: H
DATE: 2018/01/18