TABLE OF CONTENTS

SHEET NO.	SHEET DESCRIPTION
1	NOTES AND BOM
2	CONFIGURATIONS
3-4	KEY CONFIGURATIONS
5	RECEPTACLE CONNECTOR ASSEMBLY
6	BACKSHELL NOTES
7	BACKSHELL
8	BACKSHELL CONFIGURATIONS

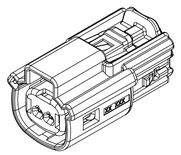

1x2

NOTES: VALID UNLESS OTHERWISE SPECIFIED

1. GENERAL:
a. APPLICATION SPECIFICATION SEE: AS-33472-100
-CONTAINS: PRODUCT INTRODUCTION, PRODUCT SUMMARY, CONNECTOR ASSEMBLY, PACKAGING INFORMATION, CONNECTOR MATING, SERVICE INSTRUCTIONS, ELECTRICAL CONTINUITY CHECKING, CRIMPING, AND TROUBLESHOOTING.
-DESIGNED TO MATE WITH DEVICE OR CONNECTOR AS SPECIFIED IN THE MATING INTERFACE/CONNECTOR DRAWINGS CHART.
*DENOTES DRAWINGS THAT CAN BE ACCESSED AT <http://ewcap.uscarteams.org/>.
-ASSEMBLY SHIPPED WITH PLR IN PRE-LOCK POSITION (SEE PLR PRE-LOCK VIEW SHEET 5).
b. PRODUCT SPECIFICATION SEE:
-STANDARD CONFIGURATION: PS-33471-000
-UL V0 CONFIGURATION: PS-160105-0001
CONTAINS: PRODUCT INTRODUCTION, PRODUCT SUMMARY, RATINGS (CURRENT, TEMPERATURE, SEALING, AND FLAMMABILITY), TERMINALS, WIRE DIAMETER RANGE, PRODUCT VALIDATION, AND PRODUCT DEVIATIONS.
c. PACKAGING SPECIFICATION PER MOLEX DRAWING: SEE PACKAGING CHART
d. PARTS MUST BE IN COMPLIANCE TO MOLEX CHEMICAL SUBSTANCES FOR PRODUCTS AND PACKAGING SPECIFICATION: QEHS-699000-301
e. DATA MUST BE SUBMITTED UNDER THE MOLEX PART NUMBER TO IMDS (COMPANY ID#13255)

2. DESIGN - MATERIALS:
a. FOR BILL OF MATERIALS SEE:
-STANDARD CONFIGURATION SD-33471-0002
-UL V0 CONFIGURATION SD-160105-0002

3. DESIGN - GEOMETRY:
a. THE 3-D CAD DATA IS BASIC (WITHOUT TOLERANCE) AND MASTER FOR THIS PART WITH THE EXCEPTION OF UNDERLINED DIMENSIONS. DIMENSIONAL INFORMATION NOT SHOWN ON THIS DRAWING IS DEFINED BY THE DATA FILE AT ITS LATEST REVISION.
b. GEOMETRIC DIMENSIONS AND TOLERANCES PER ASME Y14.5M-2009
c. EDGES AND UNDIMENSIONED DETAILS PER ISO13715
d. CORNERS SHOWN AS SHARP TO BE R 0.2 MAX.
e. LETTERING SHALL BE 0.15 MAX RAISED IN 0.25 MAX RECESS PAD. THIS INCLUDES RECYCLING CODE, CAVITY ID, VENDOR IDENTIFICATION, AND CUSTOMER MATERIAL NUMBER.
f. VISUAL DEFECTS SHALL MEET COSMETIC STANDARD PS-45499-002 (Class B).
g. LASER MARKING:
1. PART NUMBER
2. DAY OF THE YEAR
3. SHIFT
4. YEAR
FOR ADDITIONAL INFORMATION SEE SECTION 5 UNDER PROCEDURES IN ES-34735-008.

PACKAGING

DESCRIPTION	DRAWING NO.
1X2	PK-31300-635
1X6	PK-31300-903

MATING INTERFACE/CONNECTOR DRAWINGS

DESCRIPTION	INTERFACE DEFINITION	MOLEX INLINE
1X2	*150-S-002-1-Z05	SD-33481-0001
1X6	*150-S-006-1-Z03	SD-33481-0001

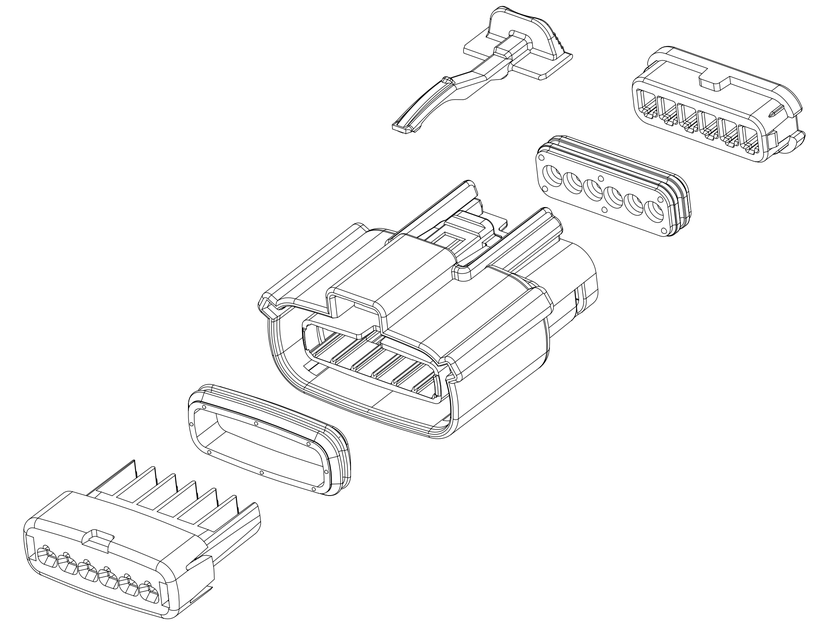

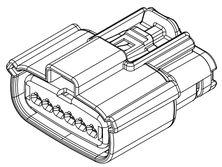

1x6

REV	REV DESCRIPTION
A1	UPDATED THE DRAWING FRAME
A	MINOR GEOMETRY CHANGE FOR UL V0
2	UPDATE VIEWSETS
1	INITIAL RELEASE

INSPECTION NUMBER LOG
LAST NUMBER: 11
ADDED: 11
REMOVED:

THIS DRAWING CONTAINS INFORMATION THAT IS PROPRIETARY TO MOLEX ELECTRONIC TECHNOLOGIES, LLC AND SHOULD NOT BE USED WITHOUT WRITTEN PERMISSION

FUNCTIONAL SYMBOLS
FA = 0
FC = 0
FD = 0
DIVISIONAL SYMBOLS

DIMENSION UNITS	SCALE
mm	1.5:1

GENERAL TOLERANCES (UNLESS SPECIFIED)

ANGULAR TOL	±	1.0 °
4 PLACES	±	
3 PLACES	±	
2 PLACES	±	0.1
1 PLACE	±	0.2
0 PLACES	±	

DRAFT WHERE APPLICABLE MUST REMAIN WITHIN DIMENSIONS

CURRENT REV DESC:

EC NO: 643941
DRWN: XLDONG03 2020/08/21
CHK'D: JDENG02 2020/08/26
APPR: JDENG02 2020/08/26

INITIAL REVISION:
DRWN: APROFFITT 2015/11/04
APPR: KDEKOSHI 2016/06/14

molex

MX150 RCPT
SINGLE ROW SEALED ASSY MAT SEAL

PRODUCT CUSTOMER DRAWING

DOCUMENT NUMBER	DOC TYPE	DOC PART	REVISION
SD-33471-0001	PSD	001	A1

THIRD ANGLE PROJECTION	DRAWING	SERIES	MATERIAL NUMBER	CUSTOMER	SHEET NUMBER
	D-SIZE	33471	SEE NOTE 2a	GENERAL MARKET	1 OF 8

DOCUMENT STATUS	P1	RELEASE DATE	2020/08/26 07:23:52

SHEET DESCRIPTION

CONFIGURATIONS

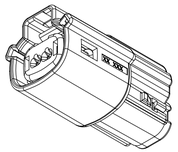

1x2 - STD

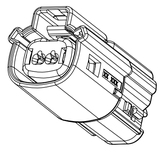

1x2 - UL V0*

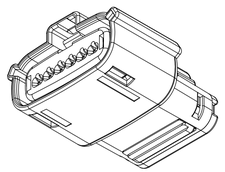

1x6 - STD

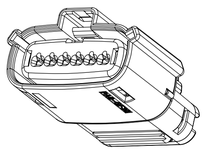

1x6 - UL V0*

*MINOR GEOMETRY DIFFERENCE THAN STANDARD CONFIGUATION
SEE NOTES 1 & 2 FOR MORE INFORMATION

DOCUMENT STATUS	P1	RELEASE DATE	2020/08/26 07:23:52

FUNCTIONAL SYMBOLS	
FA =	0
FC =	0
FD =	0
DIVISIONAL SYMBOLS	

THIS DRAWING CONTAINS INFORMATION THAT IS PROPRIETARY TO MOLEX ELECTRONIC TECHNOLOGIES, LLC AND SHOULD NOT BE USED WITHOUT WRITTEN PERMISSION

DIMENSION UNITS	SCALE
mm	1.5:1

GENERAL TOLERANCES (UNLESS SPECIFIED)

ANGULAR TOL	±	1.0 °
4 PLACES	±	
3 PLACES	±	
2 PLACES	±	0.1
1 PLACE	±	0.2
0 PLACES	±	

DRAFT WHERE APPLICABLE MUST REMAIN WITHIN DIMENSIONS

CURRENT REV DESC:

EC NO: 643941
DRWN: XLDONG03 2020/08/21
CHK'D: JDENG02 2020/08/26
APPR: JDENG02 2020/08/26

INITIAL REVISION:
DRWN: APROFFITT 2015/11/04
APPR: KDEKOSKI 2016/06/14

molex

MX150 RCPT
SINGLE ROW SEALED ASSY MAT SEAL

PRODUCT CUSTOMER DRAWING

THIRD ANGLE PROJECTION	DRAWING	SERIES
	D-SIZE	33471

DOCUMENT NUMBER	DOC TYPE	DOC PART	REVISION
SD-33471-0001	PSD	001	A1

MATERIAL NUMBER	CUSTOMER	SHEET NUMBER
SEE NOTE 2a	GENERAL MARKET	2 OF 8

SHEET DESCRIPTION

KEY CONFIGURATIONS

1X2

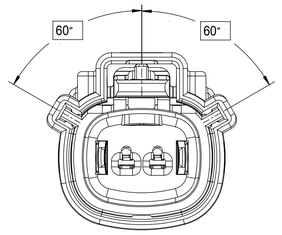

KEY A

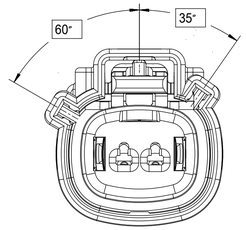

KEY B

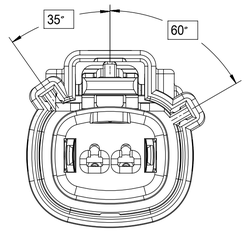

KEY C

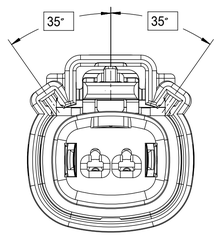

KEY D

THIS DRAWING CONTAINS INFORMATION THAT IS PROPRIETARY TO MOLEX ELECTRONIC TECHNOLOGIES, LLC AND SHOULD NOT BE USED WITHOUT WRITTEN PERMISSION

FUNCTIONAL SYMBOLS	FA = 0, FC = 0, FP = 0
DIVISIONAL SYMBOLS	
DIMENSION UNITS	mm
SCALE	3:1
GENERAL TOLERANCES (UNLESS SPECIFIED)	
ANGULAR TOL	± 1.0 °
4 PLACES	±
3 PLACES	±
2 PLACES	± 0.1
1 PLACE	± 0.2
0 PLACES	±
DRAFT WHERE APPLICABLE MUST REMAIN WITHIN DIMENSIONS	

CURRENT REV DESC:

EC NO: 643941

DRWN: XLDONG03 2020/08/21

CHK'D: JDENG02 2020/08/26

APPR: JDENG02 2020/08/26

INITIAL REVISION:

DRWN: APROFFITT 2015/11/04

APPR: KDEKOSKI 2016/06/14

molex

MX150 RCPT
SINGLE ROW SEALED ASSY MAT SEAL

PRODUCT CUSTOMER DRAWING

DOCUMENT NUMBER	DOC TYPE	DOC PART	REVISION
SD-33471-0001	PSD	001	A1

THIRD ANGLE PROJECTION	DRAWING	SERIES	MATERIAL NUMBER	CUSTOMER	SHEET NUMBER
	D-SIZE	33471	SEE NOTE 2a	GENERAL MARKET	3 OF 8

DOCUMENT STATUS	P1	RELEASE DATE	2020/08/26 07:23:52

TEMPLATE: master-fb-prod-D
VERSION: 2.01
DATE: 2020/01/14

SHEET DESCRIPTION

KEY CONFIGURATIONS CONT.

1X6

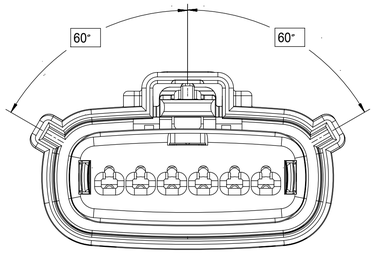

KEY A

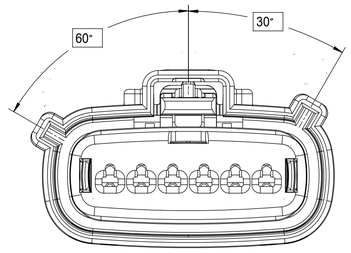

KEY B

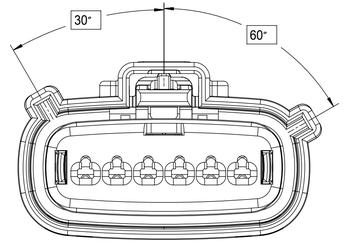

KEY C

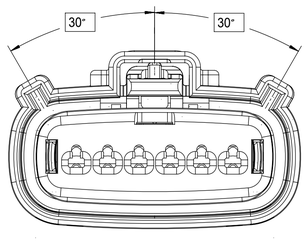

KEY D

THIS DRAWING CONTAINS INFORMATION THAT IS PROPRIETARY TO MOLEX ELECTRONIC TECHNOLOGIES, LLC AND SHOULD NOT BE USED WITHOUT WRITTEN PERMISSION

FUNCTIONAL SYMBOLS	DIMENSION UNITS	SCALE
FA = 0	mm	3:1
FC = 0	GENERAL TOLERANCES (UNLESS SPECIFIED)	
FP = 0	ANGULAR TOL ± 1.0 °	
DIVISIONAL SYMBOLS	4 PLACES ±	
	3 PLACES ±	
	2 PLACES ± 0.1	
	1 PLACE ± 0.2	
	0 PLACES ±	
	DRAFT WHERE APPLICABLE MUST REMAIN WITHIN DIMENSIONS	

CURRENT REV DESC:

EC NO: 643941

DRWN:	XLDONG03	2020/08/21
CHK'D:	JDENG02	2020/08/26
APPR:	JDENG02	2020/08/26

INITIAL REVISION:

DRWN:	APROFFITT	2015/11/04
APPR:	KDEKOSKI	2016/06/14

molex

MX150 RCPT
SINGLE ROW SEALED ASSY MAT SEAL

PRODUCT CUSTOMER DRAWING

DOCUMENT NUMBER	DOC TYPE	DOC PART	REVISION
SD-33471-0001	PSD	001	A1

THIRD ANGLE PROJECTION	DRAWING	SERIES	MATERIAL NUMBER	CUSTOMER	SHEET NUMBER
	D-SIZE	33471	SEE NOTE 2a	GENERAL MARKET	4 OF 8

DOCUMENT STATUS	P1	RELEASE DATE	2020/08/26	07:23:52

SHEET DESCRIPTION

RECEPTACLE CONNECTOR ASSEMBLY - STD

CHARTED DIMENSIONS

DESCRIPTION	DIMENSIONS					
	A	B	C	D	E	F
1X2	19.40	1.75	21.73	20.55	37.65	19.64
1X6	32.75	1.75	35.21	19.90	37.65	N/A
1X6 UL V0	N/A	1.75	35.23	19.90	37.65	33.64

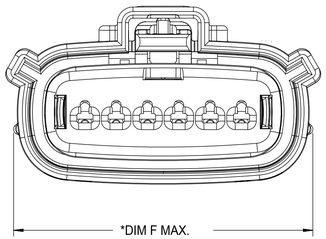

*APPLIE TO UL V0 CONFIGURATIONS ONLY

(11)

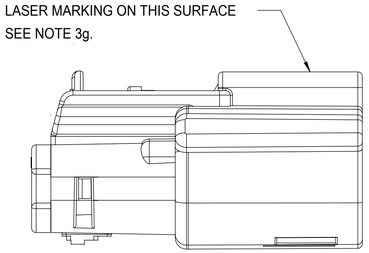

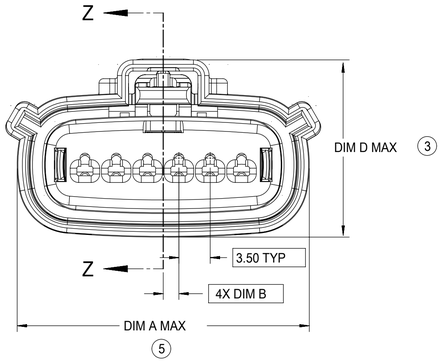

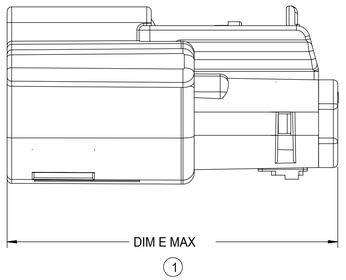

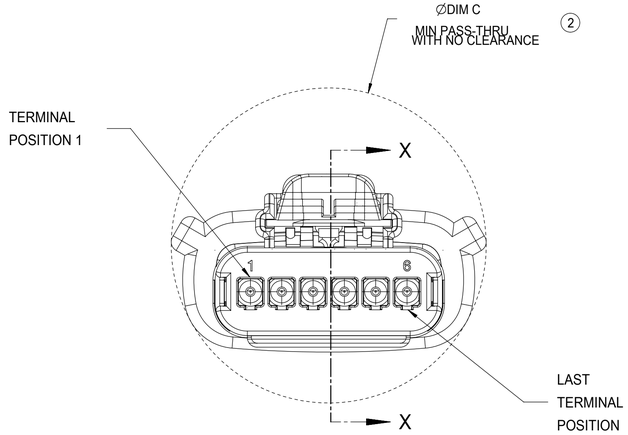

REAR VIEW
(WIRE HARNESS SIDE)

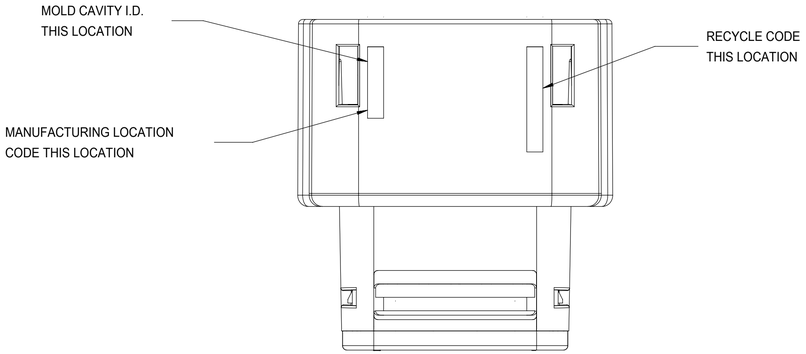

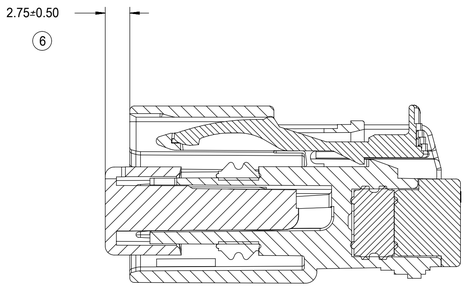

PRIMARY LOCK REINFORCEMENT (PLR) SHOWN
IN PRE-STAGED POSITION

SECTION Z-Z

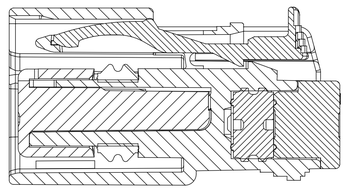

PRIMARY LOCK REINFORCEMENT (PLR) SHOWN
IN FINAL-LOCK POSITION

SECTION X-X

DOCUMENT STATUS	P1	RELEASE DATE	2020/08/26 07:23:52

FUNCTIONAL SYMBOLS	
FA =	0
FC =	0
FB =	0
DIVISIONAL SYMBOLS	

DIMENSION UNITS	SCALE
mm	3:1

GENERAL TOLERANCES (UNLESS SPECIFIED)

ANGULAR TOL	±	1.0 °
4 PLACES	±	
3 PLACES	±	
2 PLACES	±	0.1
1 PLACE	±	0.2
0 PLACES	±	

DRAFT WHERE APPLICABLE MUST REMAIN WITHIN DIMENSIONS

THIS DRAWING CONTAINS INFORMATION THAT IS PROPRIETARY TO MOLEX ELECTRONIC TECHNOLOGIES, LLC AND SHOULD NOT BE USED WITHOUT WRITTEN PERMISSION

CURRENT REV DESC:

EC NO: 643941
DRWN: XLDONG03 2020/08/21
CHK'D: JDENG02 2020/08/26
APPR: JDENG02 2020/08/26

INITIAL REVISION:
DRWN: APROFFITT 2015/11/04
APPR: KDEKOSKI 2016/06/14

THIRD ANGLE PROJECTION | DRAWING: D-SIZE | SERIES: 33471

molex

MX150 RCPT
SINGLE ROW SEALED ASSY MAT SEAL

PRODUCT CUSTOMER DRAWING

DOCUMENT NUMBER	DOC TYPE	DOC PART	REVISION
SD-33471-0001	PSD	001	A1

MATERIAL NUMBER	CUSTOMER	SHEET NUMBER
SEE NOTE 2a	GENERAL MARKET	5 OF 8

SHEET DESCRIPTION

BACKSHELL NOTES

BACKSHELL NOTES: VALID UNLESS OTHERWISE SPECIFIED

1. GENERAL:

a. APPLICATION SPECIFICATION SEE: AS-34951-001

-DESIGNED TO MATE WITH RECEPTACLE SEALED ASSEMBLY
SPECIFIED IN MOLEX DRAWING SD-33471-0001.

-SYSTEM TO BE USED WITH WIRE WITHIN DIAMETER RANGE OF 1.2mm TO 2.69mm.

-COMPONENTS ARE OPTIONAL AND MUST BE PURCHASED SEPERATELY.

-BACKSHELL DESIGN IS OWNED BY SCHLEMMER.

-FOR ADDITIONAL INFORMATION SEE THE BACKSHELL COMPONENT DRAWING SD-34949-0001.

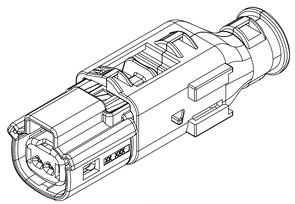

1X2

BACKSHELL CUSTOMER
MODEL NUMBER LEGEND

34949-XXXX

CUSTOMER MODEL COMPONENTS
0 - BACKSHELL ONLY
1 - BACKSHELL & MX150 HOUSING KEY A ASSEMBLY
2 - BACKSHELL & MX150 HOUSING KEY B ASSEMBLY
3 - BACKSHELL & MX150 HOUSING KEY C ASSEMBLY
4 - BACKSHELL & MX150 HOUSING KEY D ASSEMBLY

BACKSHELL FEATURES
1 - WITH RIBS
2 - WITHOUT RIBS

MX150 CIRCUIT SIZE 02, 03, 04, 05, 06

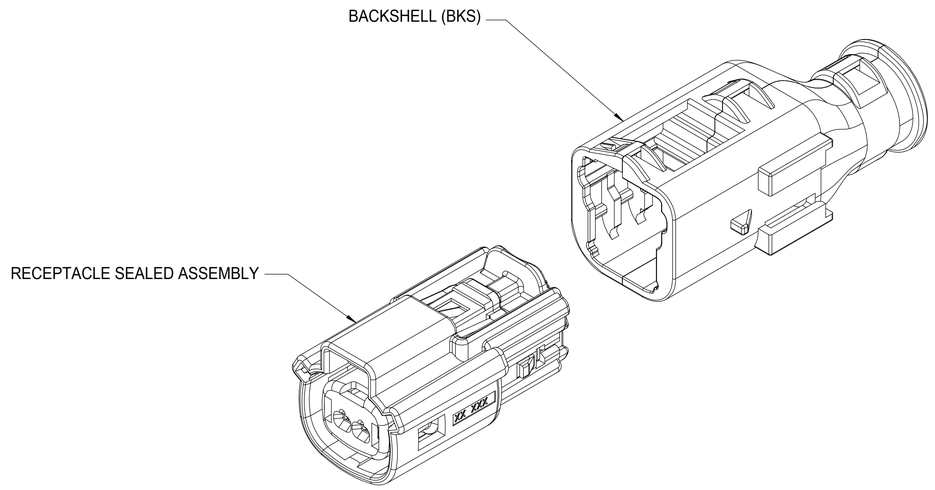

FUNCTIONAL SYMBOLS: EA = 0; EC = 0; EP = 0	THIS DRAWING CONTAINS INFORMATION THAT IS PROPRIETARY TO MOLEX ELECTRONIC TECHNOLOGIES, LLC AND SHOULD NOT BE USED WITHOUT WRITTEN PERMISSION								
DIVISIONAL SYMBOLS	DIMENSION UNITS: mm	SCALE: 4:1	CURRENT REV DESC:			molex			
	GENERAL TOLERANCES (UNLESS SPECIFIED)		EC NO: 643941			MX150 RCPT SINGLE ROW SEALED ASSY MAT SEAL			
	ANGULAR TOL ± 1.0 °		DRWN: XLDONG03	2020/08/21		PRODUCT CUSTOMER DRAWING			
	4 PLACES ±		CHK'D: JDENG02	2020/08/26					
	3 PLACES ±		APPR: JDENG02	2020/08/26					
	2 PLACES ± 0.1		INITIAL REVISION:			DOCUMENT NUMBER: SD-33471-0001	DOC TYPE: PSD	DOC PART: 001	REVISION: A1
	1 PLACE ± 0.2		DRWN: APROFFITT	2015/11/04					
	0 PLACES ±		APPR: KDEKOSKI	2016/06/14					
	DRAFT WHERE APPLICABLE MUST REMAIN WITHIN DIMENSIONS		THIRD ANGLE PROJECTION	DRAWING: D-SIZE	SERIES: 33471	MATERIAL NUMBER: SEE NOTE 2a	CUSTOMER: GENERAL MARKET		SHEET NUMBER: 6 OF 8

DOCUMENT STATUS	P1	RELEASE DATE	2020/08/26 07:23:52

SHEET DESCRIPTION

BACKSHELL

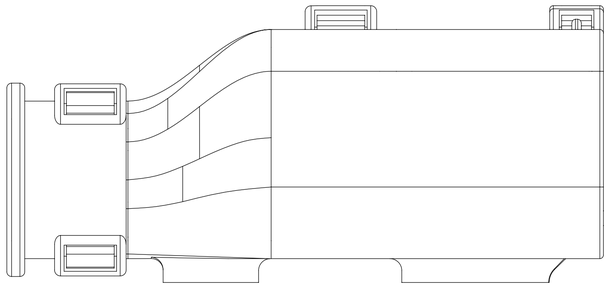

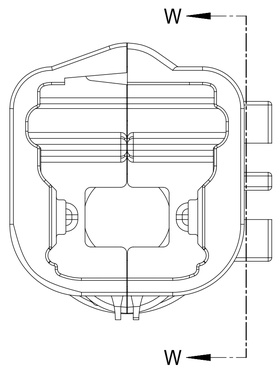

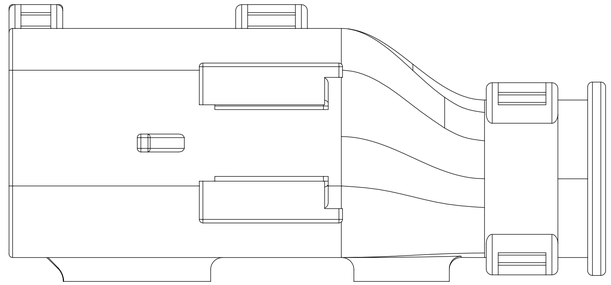

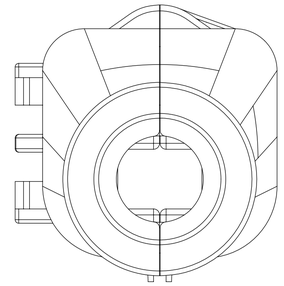

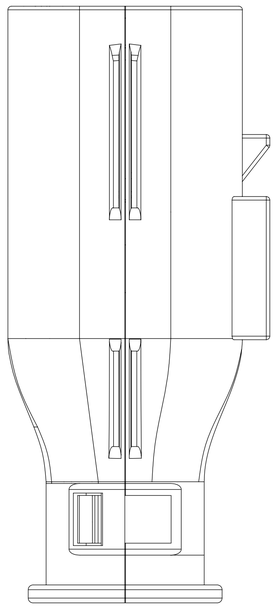

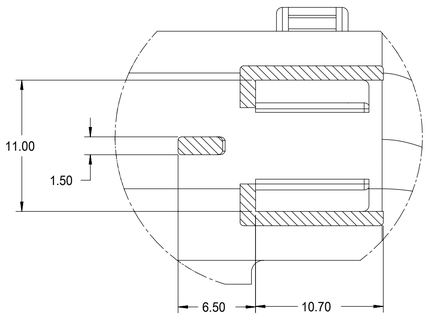

Partial W-W

SCALE 4:1

DOCUMENT STATUS	P1	RELEASE DATE	2020/08/26	07:23:52	

THIS DRAWING CONTAINS INFORMATION THAT IS PROPRIETARY TO MOLEX ELECTRONIC TECHNOLOGIES, LLC AND SHOULD NOT BE USED WITHOUT WRITTEN PERMISSION

FUNCTIONAL SYMBOLS

FA = 0

FC = 0

FP = 0

DIVISIONAL SYMBOLS

DIMENSION UNITS	SCALE
mm	4:1

GENERAL TOLERANCES (UNLESS SPECIFIED)		
ANGULAR TOL	±	1.0 °
4 PLACES	±	
3 PLACES	±	
2 PLACES	±	0.1
1 PLACE	±	0.2
0 PLACES	±	

DRAFT WHERE APPLICABLE MUST REMAIN WITHIN DIMENSIONS

CURRENT REV DESC:

EC NO: 643941

DRWN: XLDONG03 2020/08/21

CHK'D: JDENG02 2020/08/26

APPR: JDENG02 2020/08/26

INITIAL REVISION:

DRWN: APROFFITT 2015/11/04

APPR: KDEKOSKI 2016/06/14

molex

MX150 RCPT
SINGLE ROW SEALED ASSY MAT SEAL

PRODUCT CUSTOMER DRAWING

DOCUMENT NUMBER	DOC TYPE	DOC PART	REVISION
SD-33471-0001	PSD	001	A1

THIRD ANGLE PROJECTION	DRAWING	SERIES	MATERIAL NUMBER	CUSTOMER	SHEET NUMBER
	D-SIZE	33471	SEE NOTE 2a	GENERAL MARKET	7 OF 8

SHEET DESCRIPTION

BACKSHELL CONFIGURATIONS

CHARTED DIMENSIONS	
DESCRIPTION	DIMENSIONS
	G
1X2	26.00

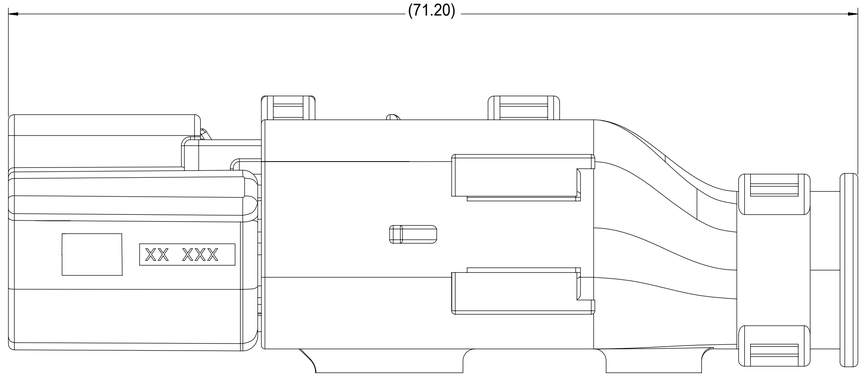

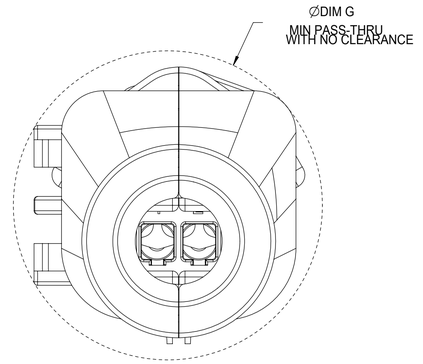

RECEPTACLE SEALED ASSEMBLY WITH RECEPTACLE BACKSHELL

FUNCTIONAL SYMBOLS: FA = 0; FC = 0; FP = 0	THIS DRAWING CONTAINS INFORMATION THAT IS PROPRIETARY TO MOLEX ELECTRONIC TECHNOLOGIES, LLC AND SHOULD NOT BE USED WITHOUT WRITTEN PERMISSION				
DIVISIONAL SYMBOLS	DIMENSION UNITS: mm	SCALE: 4:1	CURRENT REV DESC:	molex	
	GENERAL TOLERANCES (UNLESS SPECIFIED)			MX150 RCPT SINGLE ROW SEALED ASSY MAT SEAL	
	ANGULAR TOL ± 1.0 °		EC NO: 643941		
	4 PLACES ±		DRWN: XLDONG03 2020/08/21	PRODUCT CUSTOMER DRAWING	
	3 PLACES ±		CHK'D: JDENG02 2020/08/26		
	2 PLACES ± 0.1		APPR: JDENG02 2020/08/26		
	1 PLACE ± 0.2		INITIAL REVISION:	DOCUMENT NUMBER: SD-33471-0001 / DOC TYPE: PSD / DOC PART: 001 / REVISION: A1	
	0 PLACES ±		DRWN: APROFFITT 2015/11/04		
	DRAFT WHERE APPLICABLE MUST REMAIN WITHIN DIMENSIONS		APPR: KDEKOSKI 2016/06/14		
	THIRD ANGLE PROJECTION	DRAWING: D-SIZE	SERIES: 33471	MATERIAL NUMBER: SEE NOTE 2a / CUSTOMER: GENERAL MARKET	SHEET NUMBER: 8 OF 8

DOCUMENT STATUS	P1	RELEASE DATE	2020/08/26 07:23:52

TABLE OF CONTENTS

SHEET NO.	SHEET DESCRIPTION
1	NOTES AND BOM
2	POLARIZATIONS
3	RCPT CONNECTOR ASSY
4	BOM SHEET 1
5	BOM SHEET 2
6	BOM SHEET 3

NOTES: VALID UNLESS OTHERWISE SPECIFIED

1. GENERAL:

a. APPLICATION SPECIFICATION SEE: AS-33472-100
-CONTAINS: PRODUCT INTRODUCTION, PRODUCT SUMMARY, CONNECTOR ASSEMBLY, PACKAGING INFORMATION, CONNECTOR MATING, SERVICE INSTRUCTIONS, ELECTRICAL CONTINUITY CHECKING, CRIMPING, AND TROUBLESHOOTING.
-DESIGNED TO MATE WITH DEVICE CONNECTION AS SPECIFIED IN DRAWING EWCAP 150-S-006-1-Z03, AVAILIBLE AT http://ewcap.uscarteams.org/.
-DESIGNED TO MATE WITH BLADE SEALED ASSEMBLY AS SPECIFIED IN DRAWING SD-33481-061
-FOR 1.5mm RECEPTACLE TERMINALS TO BE USED WITH THIS ASSEMBLY. SEE MOLEX DRAWING SD-33012-002.
-SYSTEM TO BE USED WITH WIRE WITHIN DIAMETER RANGE OF 1.2 mm TO 2.69 mm.
-ASSEMBLY SHIPPED WITH PLR AND CPA IN PRE-LOCK POSITION (SEE SECTION Z-Z PRE-LOCK).
-IN THE EVENT THAT THE PLR IS FOUND IN THE SEATED (FINAL LOCK) POSITION, REFER TO MOLEX SPECIFICATION PS-34646-001, AVAILABLE AT www.molex.com http://www.molex.com.
-ASSEMBLY CONFORMS TO SAE/USCAR-2 REV.4 WITH THE FOLLOWING EXCEPTIONS:
ENGAGEMENT FORCE TO MOVE CPA FROM PRE-LOCK TO FINAL LOCK POSITION WHEN UNMATED: 40N MIN.
DISENGAGEMENT FORCE TO MOVE CPA FROM FINAL LOCK TO PRE-LOCK POSITION: 3N MIN, 40N MAX
TERMINAL INSERTION FORCE FOR WIRE DIAMETER ABOVE 2.5mm NOT EXCEEDING 2.69mm SHALL NOT EXCEED 40 NEWTONS.

b. PRODUCT SPECIFICATION SEE: PS-33471-000
CONTAINS: PRODUCT INTRODUCTION, PRODUCT SUMMARY, RATINGS (CURRENT, TEMPERATURE, SEALING, AND FLAMMABILITY), AND PRODUCT VALIDATION.

c. PACKAGING SPECIFICATION PER MOLEX DRAWING: PK-31300-903

d. PARTS MUST BE IN COMPLIANCE TO MOLEX CHEMICAL SUBSTANCES FOR PRODUCTS AND PACKAGING SPECIFICATION: ES-40000-5016

e. DATA MUST BE SUBMITTED UNDER THE MOLEX PART NUMBER TO IMDS (COMPANY ID#13255)

2. DESIGN - MATERIALS:

a. CONNECTOR HOUSING, GROMMET CAP, PLR: SPS/NYLON BLEND 20% GLASS FILLED

b. CPA: PBT 20% GLASS FILLED

c. MAT SEAL AND RING SEAL: INHERENTLY LUBRICATED SILICONE

3. DESIGN - GEOMETRY:

a. THIS IS A 100% CAD GENERATED PART. THE CAD MATHEMATICAL DATA IS THE MASTER FOR THIS PART. FOR DIMENSIONAL OR ANY INFORMATION NOT SHOWN ON THIS DRAWING, ANALYZE THE CAD MODEL.

b. GEOMETRIC DIMENSIONS AND TOLERANCES PER ASME Y14.5M - 1994

c. EDGES AND UNDIMENSIONED DETAILS PER ISO13715

d. CORNERS SHOWN AS SHARP TO BE R 0.2 MAX.

e. LETTERING SHALL BE 0.15 MAX RAISED IN 0.25 MAX RECESS PAD. THIS INCLUDES RECYCLING CODE, CAVITY ID, VENDOR IDENTIFICATION, AND CUSTOMER MATERIAL NUMBER.

f. VISUAL DEFECTS SHALL MEET COSMETIC STANDARD PS-45499-002 (Class B)

g. LASER MARKING: TBD

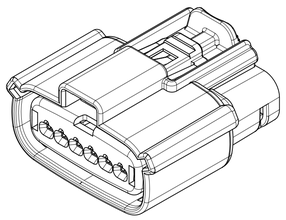

MATING INTERFACE CHART

DESCRIPTION	CIRCUIT SIZE	SERIES	COLOR	INTERFACE MODEL NUMBER	STATUS
MX150 1X6 RCPT ASSY, KEY A	6	33471	BLACK	CM-150-S-006-1-A03	SALEABLE
MX150 1X6 RCPT ASSY, KEY B	6	33471	DARK GRAY	CM-150-S-006-1-B03	SALEABLE
MX150 1X6 RCPT ASSY, KEY C	6	33471	LIGHT GRAY	CM-150-S-006-1-C03	SALEABLE
MX150 1X6 RCPT ASSY, KEY D	6	33471	BLACK	CM-150-S-006-1-D03	SALEABLE

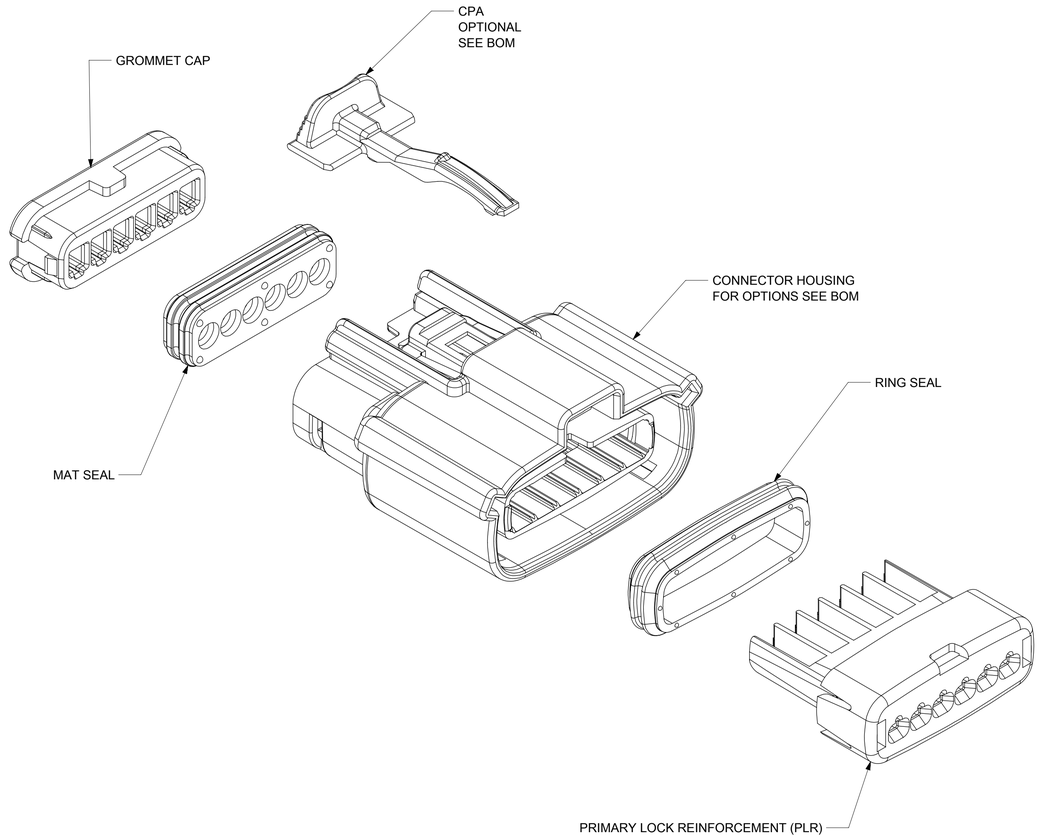

REV	REV DESCRIPTION
U5	ADDED PN: 33471-6081
U4	Updated status of parts based on new mat seal
U3	ADDED 33471-6080
U2	UPDATED 33471-60** PARTS TO SALEABLE AND REMOVED "NOT RECOMMENDED" PART NUMBERS
U1	Remastered, Added 33471-60** Part Numbers

INSPECTION NUMBER LOG

LAST NUMBER: 5

THIS DRAWING CONTAINS INFORMATION THAT IS PROPRIETARY TO MOLEX ELECTRONIC TECHNOLOGIES, LLC AND SHOULD NOT BE USED WITHOUT WRITTEN PERMISSION

FUNCTIONAL SYMBOLS
FA = 0
FC = 0
FF = 0

DIVISIONAL SYMBOLS

DIMENSION UNITS	SCALE
mm	2:1

GENERAL TOLERANCES (UNLESS SPECIFIED)

ANGULAR TOL	±	3.0 °
4 PLACES	±	
3 PLACES	±	
2 PLACES	±	0.1
1 PLACE	±	0.3
0 PLACES	±	

DRAFT WHERE APPLICABLE MUST REMAIN WITHIN DIMENSIONS

CURRENT REV DESC: SEE REVISION TABLE

EC NO: 669011
DRWN: SCV 2021/07/02
CHK'D: GGA 2021/07/08
APPR: GGA 2021/07/08

INITIAL REVISION:
DRWN: DGRIFFITHS 2005/08/26
APPR: smarceau 2005/08/29

molex

MX150 1X6 RECEPTACLE
SEALED ASSEMBLY MAT SEAL

PRODUCT CUSTOMER DRAWING

DOCUMENT NUMBER	DOC TYPE	DOC PART	REVISION
SD-33471-061	PSD	001	U5

THIRD ANGLE PROJECTION	DRAWING	SERIES	MATERIAL NUMBER	CUSTOMER	SHEET NUMBER
	D-SIZE	33471	SEE TABLE	GENERAL MARKET	1 OF 6

DOCUMENT STATUS	P1	RELEASE DATE	2021/07/08 11:19:18

SHEET DESCRIPTION
POLARIZATIONS

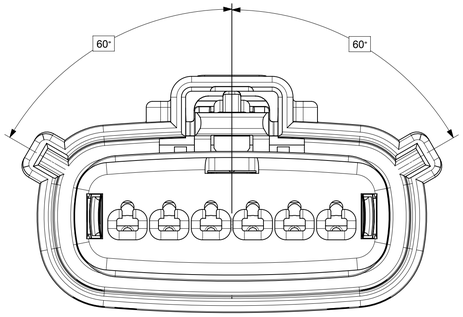

KEY A

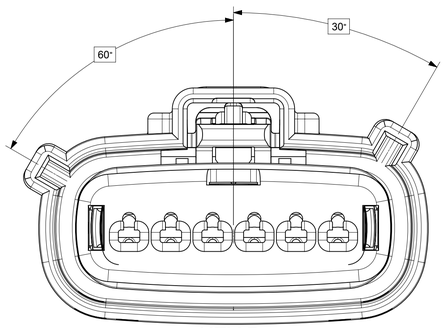

KEY B

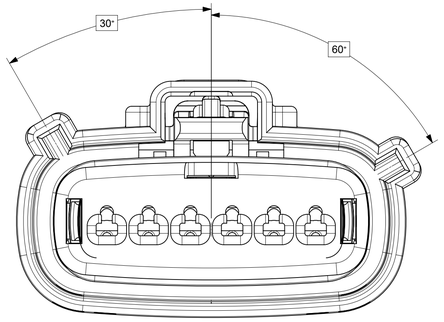

KEY C

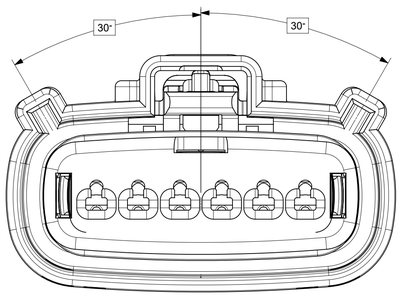

KEY D

THIS DRAWING CONTAINS INFORMATION THAT IS PROPRIETARY TO MOLEX ELECTRONIC TECHNOLOGIES, LLC AND SHOULD NOT BE USED WITHOUT WRITTEN PERMISSION

FUNCTIONAL SYMBOLS	DIMENSION UNITS	SCALE	CURRENT REV DESC: SEE REVISION TABLE	molex
FA = 0	mm	4:1		
FC = 0	GENERAL TOLERANCES (UNLESS SPECIFIED)			MX150 1X6 RECEPTACLE SEALED ASSEMBLY MAT SEAL
FP = 0	ANGULAR TOL ± 3.0 °		EC NO: 669011	
DIVISIONAL SYMBOLS	4 PLACES ±		DRWN: SCV 2021/07/02	
	3 PLACES ±		CHK'D: GGA 2021/07/08	PRODUCT CUSTOMER DRAWING
	2 PLACES ± 0.1		APPR: GGA 2021/07/08	
	1 PLACE ± 0.3		INITIAL REVISION:	DOCUMENT NUMBER: SD-33471-061 · DOC TYPE: PSD · DOC PART: 001 · REVISION: U5
	0 PLACES ±		DRWN: DGRIFFITHS 2005/08/26	
	DRAFT WHERE APPLICABLE MUST REMAIN WITHIN DIMENSIONS		APPR: smarceau 2005/08/29	

THIRD ANGLE PROJECTION	DRAWING	SERIES	MATERIAL NUMBER	CUSTOMER	SHEET NUMBER
	D-SIZE	33471	SEE TABLE	GENERAL MARKET	2 OF 6

DOCUMENT STATUS	P1	RELEASE DATE	2021/07/08 11:19:18

SHEET DESCRIPTION

RCPT CONNECTOR ASSY

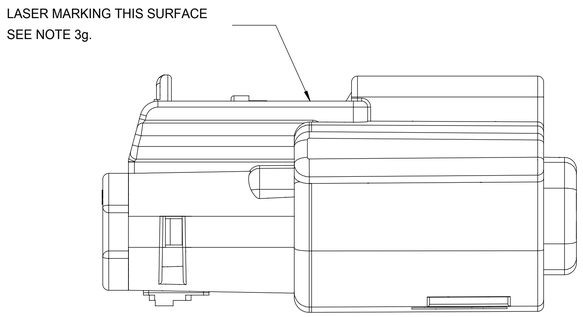

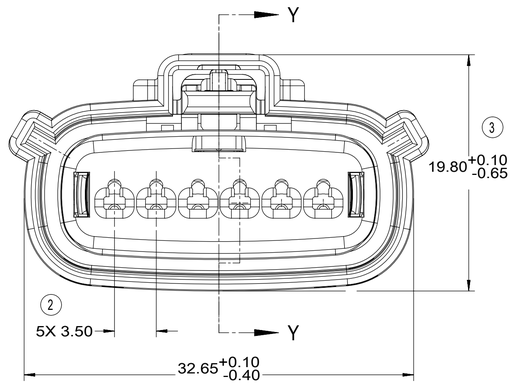

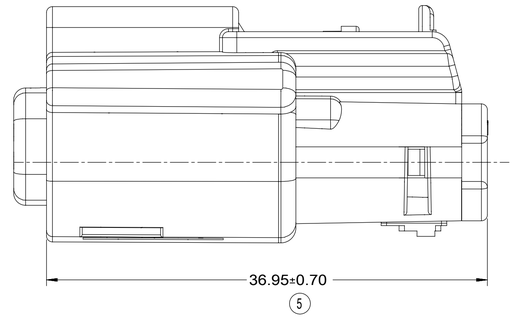

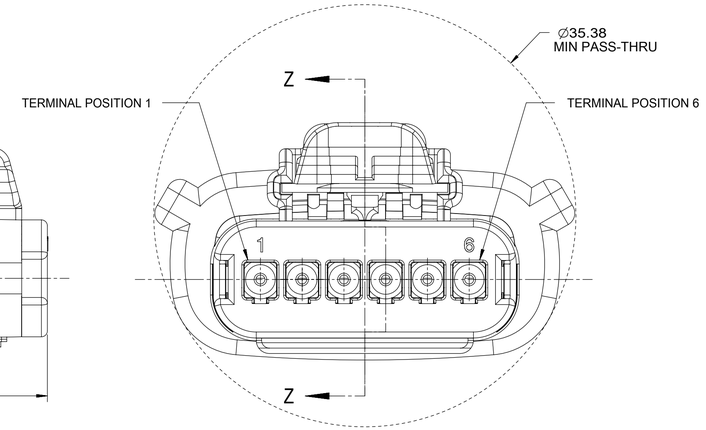

REAR VIEW
(WIRE HARNESS SIDE)

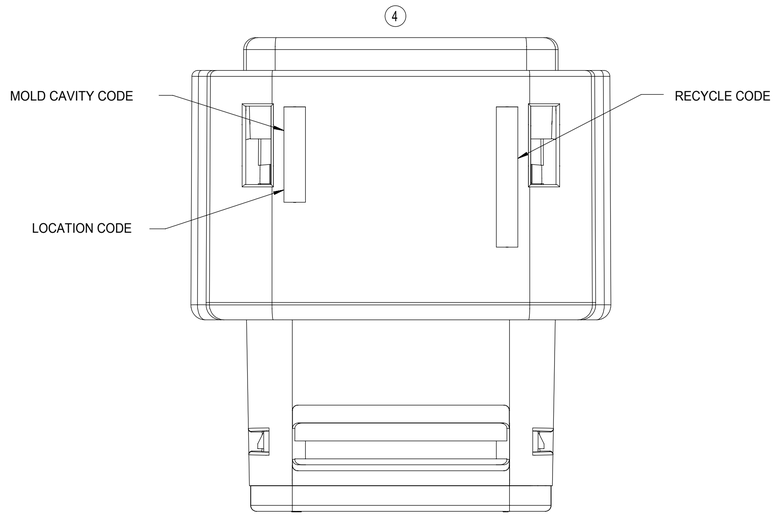

Bottom1

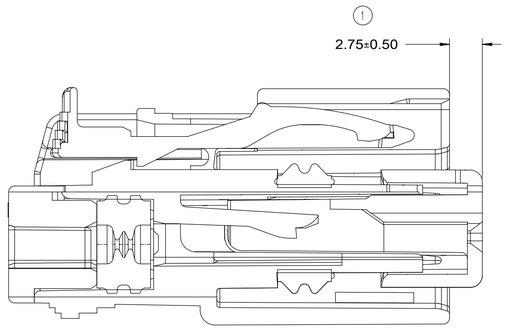

PRIMARY LOCK REINFORCEMENT (PLR) SHOWN
IN PRE-STAGED POSITION

SECTION Z-Z

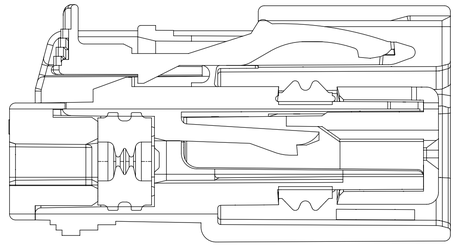

PRIMARY LOCK REINFORCEMENT (PLR) SHOWN
IN FINAL-LOCK POSITION

SECTION Y-Y

DOCUMENT STATUS	P1	RELEASE DATE	2021/07/08 11:19:18

FUNCTIONAL SYMBOLS
FA = 0
FC = 0
FF = 0
DIVISIONAL SYMBOLS

THIS DRAWING CONTAINS INFORMATION THAT IS PROPRIETARY TO MOLEX ELECTRONIC TECHNOLOGIES, LLC AND SHOULD NOT BE USED WITHOUT WRITTEN PERMISSION

DIMENSION UNITS	SCALE
mm	4:1

GENERAL TOLERANCES (UNLESS SPECIFIED)

ANGULAR TOL	±	3.0 °
4 PLACES	±	
3 PLACES	±	
2 PLACES	±	0.1
1 PLACE	±	0.3
0 PLACES	±	

DRAFT WHERE APPLICABLE MUST REMAIN WITHIN DIMENSIONS

CURRENT REV DESC: SEE REVISION TABLE

EC NO: 669011
DRWN: SCV 2021/07/02
CHK'D: GGA 2021/07/08
APPR: GGA 2021/07/08

INITIAL REVISION:
DRWN: DGRIFFITHS 2005/08/26
APPR: smarceau 2005/08/29

THIRD ANGLE PROJECTION | DRAWING: D-SIZE | SERIES: 33471

molex

MX150 1X6 RECEPTACLE
SEALED ASSEMBLY MAT SEAL

PRODUCT CUSTOMER DRAWING

DOCUMENT NUMBER	DOC TYPE	DOC PART	REVISION
SD-33471-061	PSD	001	U5

MATERIAL NUMBER	CUSTOMER	SHEET NUMBER
SEE TABLE	GENERAL MARKET	3 OF 6

SHEET DESCRIPTION

BOM SHEET 1

ASSEMBLY PART NUMBER	COLOR	KEYING OPTION	CAVITY TYPE & STATUS (NUMBER PRESENT = PLUGGED)						CPA	STATUS	COMMENTS
			1	2	3	4	5	6			
33471-0601	BLACK	A							—	PLANNED OBSOLESCENCE	
33471-0602	LT.GRAY	B							—	PLANNED OBSOLESCENCE	
33471-0603	BROWN	C							—	NOT RECOMMENDED	SEE P/N 33471-0659
33471-0604	GREEN	D							—	NOT RECOMMENDED	SEE P/N 33471-0660
33471-0605	YELLOW	A							—	PLANNED OBSOLESCENCE	
33471-0606	BLACK	A							YES	PLANNED OBSOLESCENCE	
33471-0607	LT.GRAY	B							YES	PLANNED OBSOLESCENCE	
33471-0608	BROWN	C							YES	NOT RECOMMENDED	SEE P/N 33471-0661
33471-0609	GREEN	D							YES	NOT RECOMMENDED	SEE P/N 33471-0662
33471-0610	YELLOW	A							YES	PLANNED OBSOLESCENCE	
33471-0611	BLACK	A						6	—	PLANNED OBSOLESCENCE	
33471-0612	LT.GRAY	B						6	—	PLANNED OBSOLESCENCE	
33471-0613	BROWN	C						6	—	NOT RECOMMENDED	SEE P/N 33471-0663
33471-0614	GREEN	D						6	—	NOT RECOMMENDED	SEE P/N 33471-0664
33471-0615	YELLOW	A						6	—	PLANNED OBSOLESCENCE	
33471-0616	BLACK	A						6	YES	PLANNED OBSOLESCENCE	
33471-0617	LT.GRAY	B						6	YES	PLANNED OBSOLESCENCE	
33471-0618	BROWN	C						6	YES	NOT RECOMMENDED	SEE P/N 33471-0665
33471-0619	GREEN	D						6	YES	NOT RECOMMENDED	SEE P/N 33471-0666
33471-0620	YELLOW	A						6	YES	PLANNED OBSOLESCENCE	
33471-0621	BLACK	A	1					6	—	PLANNED OBSOLESCENCE	
33471-0622	LT.GRAY	B	1					6	—	PLANNED OBSOLESCENCE	
33471-0623	BROWN	C	1					6	—	NOT RECOMMENDED	SEE P/N 33471-0667
33471-0624	GREEN	D	1					6	—	NOT RECOMMENDED	SEE P/N 33471-0668
33471-0625	YELLOW	A	1					6	—	PLANNED OBSOLESCENCE	
33471-0626	BLACK	A	1					6	YES	PLANNED OBSOLESCENCE	
33471-0627	LT.GRAY	B	1					6	YES	PLANNED OBSOLESCENCE	
33471-0628	BROWN	C	1					6	YES	NOT RECOMMENDED	SEE P/N 33471-0669
33471-0629	GREEN	D	1					6	YES	NOT RECOMMENDED	SEE P/N 33471-0670
33471-0630	YELLOW	A	1					6	YES	PLANNED OBSOLESCENCE	
33471-0631	BLACK	A	1	2	3	4	5	6	—	PLANNED OBSOLESCENCE	
33471-0632	LT.GRAY	B	1	2	3	4	5	6	—	PLANNED OBSOLESCENCE	
33471-0633	BROWN	C	1	2	3	4	5	6	—	NOT RECOMMENDED	SEE P/N 33471-0671
33471-0634	GREEN	D	1	2	3	4	5	6	—	NOT RECOMMENDED	SEE P/N 33471-0672
33471-0635	YELLOW	A	1	2	3	4	5	6	—	PLANNED OBSOLESCENCE	
33471-0650	BLACK	A					5	6	—	PLANNED OBSOLESCENCE	
33471-0651	BLACK	A	1	2	3	4	5	6	YES	PLANNED OBSOLESCENCE	
33471-0652	BLACK	A				4			YES	PLANNED OBSOLESCENCE	
33471-0653	BLACK	A			3				YES	PLANNED OBSOLESCENCE	
33471-0654	BLACK	A			3				—	PLANNED OBSOLESCENCE	
33471-0655	BLACK	A			3	4	5		—	PLANNED OBSOLESCENCE	
33471-0656	BLACK	A					5		—	PLANNED OBSOLESCENCE	
33471-0657	BLACK	A				4			—	PLANNED OBSOLESCENCE	
33471-0658	BLACK	A	1	2	3	4			—	PLANNED OBSOLESCENCE	
33471-0659	DARK GRAY	C							—	PLANNED OBSOLESCENCE	
33471-0660	STONE GRAY	D							—	PLANNED OBSOLESCENCE	
33471-0661	DARK GRAY	C							YES	PLANNED OBSOLESCENCE	
33471-0662	STONE GRAY	D							YES	PLANNED OBSOLESCENCE	
33471-0663	DARK GRAY	C						6	—	PLANNED OBSOLESCENCE	
33471-0664	STONE GRAY	D						6	—	PLANNED OBSOLESCENCE	
33471-0665	DARK GRAY	C						6	YES	PLANNED OBSOLESCENCE	
33471-0666	STONE GRAY	D						6	YES	PLANNED OBSOLESCENCE	
33471-0667	DARK GRAY	C	1					6	—	PLANNED OBSOLESCENCE	
33471-0668	STONE GRAY	D	1					6	—	PLANNED OBSOLESCENCE	
33471-0669	DARK GRAY	C	1					6	YES	PLANNED OBSOLESCENCE	
33471-0670	STONE GRAY	D	1					6	YES	PLANNED OBSOLESCENCE	
33471-0671	DARK GRAY	C	1	2	3	4	5	6	—	PLANNED OBSOLESCENCE	
33471-0672	STONE GRAY	D	1	2	3	4	5	6	—	PLANNED OBSOLESCENCE	
33471-0673	BLACK	A			3			6	—	PLANNED OBSOLESCENCE	
33471-0674	BLACK	A		2					—	PLANNED OBSOLESCENCE	
33471-0675	BLACK	A	1		3		5		YES	PLANNED OBSOLESCENCE	
33471-0676	BLACK	A	1						—	PLANNED OBSOLESCENCE	
33471-0677	BLACK	A		2	3	4			—	PLANNED OBSOLESCENCE	
33471-0678	BLACK	A				4	5		—	PLANNED OBSOLESCENCE	

DOCUMENT STATUS	P1	RELEASE DATE	2021/07/08 11:19:18

FUNCTIONAL SYMBOLS
FA = 0
FC = 0
FD = 0
DIVISIONAL SYMBOLS

THIS DRAWING CONTAINS INFORMATION THAT IS PROPRIETARY TO MOLEX ELECTRONIC TECHNOLOGIES, LLC AND SHOULD NOT BE USED WITHOUT WRITTEN PERMISSION

DIMENSION UNITS: mm
SCALE: 1:1

GENERAL TOLERANCES (UNLESS SPECIFIED)

ANGULAR TOL	± 3.0 °
4 PLACES	±
3 PLACES	±
2 PLACES	± 0.1
1 PLACE	± 0.3
0 PLACES	±

DRAFT WHERE APPLICABLE MUST REMAIN WITHIN DIMENSIONS

CURRENT REV DESC: SEE REVISION TABLE

EC NO: 669011
DRWN: SCV 2021/07/02
CHK'D: GGA 2021/07/08
APPR: GGA 2021/07/08

INITIAL REVISION:
DRWN: DGRIFFITHS 2005/08/26
APPR: smarceau 2005/08/29

molex

MX150 1X6 RECEPTACLE
SEALED ASSEMBLY MAT SEAL

PRODUCT CUSTOMER DRAWING

DOCUMENT NUMBER	DOC TYPE	DOC PART	REVISION
SD-33471-061	PSD	001	U5

THIRD ANGLE PROJECTION | DRAWING: D-SIZE | SERIES: 33471

MATERIAL NUMBER	CUSTOMER	SHEET NUMBER
SEE TABLE	GENERAL MARKET	4 OF 6

SHEET DESCRIPTION
BOM SHEET 2

ASSEMBLY PART NUMBER	COLOR	KEYING OPTION	CAVITY TYPE & STATUS (NUMBER PRESENT = PLUGGED)						CPA	STATUS	COMMENTS
			1	2	3	4	5	6			
33471-6601	BLACK	A							—	PLANNED OBSOLESCENCE	
33471-6606	BLACK	A							YES	PLANNED OBSOLESCENCE	

THIS DRAWING CONTAINS INFORMATION THAT IS PROPRIETARY TO MOLEX ELECTRONIC TECHNOLOGIES, LLC AND SHOULD NOT BE USED WITHOUT WRITTEN PERMISSION

FUNCTIONAL SYMBOLS: FA = 0; FC = 0; FP = 0

DIVISIONAL SYMBOLS

DIMENSION UNITS	SCALE
mm	1:1

GENERAL TOLERANCES (UNLESS SPECIFIED)

ANGULAR TOL	±	3.0 °
4 PLACES	±	
3 PLACES	±	
2 PLACES	±	0.1
1 PLACE	±	0.3
0 PLACES	±	

DRAFT WHERE APPLICABLE MUST REMAIN WITHIN DIMENSIONS

CURRENT REV DESC: SEE REVISION TABLE

EC NO: 669011
DRWN: SCV 2021/07/02
CHK'D: GGA 2021/07/08
APPR: GGA 2021/07/08

INITIAL REVISION:
DRWN: DGRIFFITHS 2005/08/26
APPR: smarceau 2005/08/29

THIRD ANGLE PROJECTION | DRAWING: D-SIZE | SERIES: 33471

molex

MX150 1X6 RECEPTACLE
SEALED ASSEMBLY MAT SEAL

PRODUCT CUSTOMER DRAWING

DOCUMENT NUMBER	DOC TYPE	DOC PART	REVISION
SD-33471-061	PSD	001	U5

MATERIAL NUMBER	CUSTOMER	SHEET NUMBER
SEE TABLE	GENERAL MARKET	5 OF 6

DOCUMENT STATUS	P1	RELEASE DATE	2021/07/08 11:19:18

SHEET DESCRIPTION

BOM SHEET 3

ASSEMBLY PART NUMBER	COLOR	KEYING OPTION	CAVITY TYPE & STATUS (NUMBER PRESENT = PLUGGED)						CPA	STATUS	COMMENTS
			1	2	3	4	5	6			
33471-6001	BLACK	A							—	SALEABLE	
33471-6002	LT.GRAY	B							—	SALEABLE	
33471-6003	BROWN	C							—	NOT RECOMMENDED	SEE P/N 33471-6059
33471-6004	GREEN	D							—	NOT RECOMMENDED	SEE P/N 33471-6060
33471-6005	YELLOW	A							—	SALEABLE	
33471-6006	BLACK	A							YES	SALEABLE	
33471-6007	LT.GRAY	B							YES	SALEABLE	
33471-6008	BROWN	C							YES	NOT RECOMMENDED	SEE P/N 33471-6061
33471-6009	GREEN	D							YES	NOT RECOMMENDED	SEE P/N 33471-6062
33471-6010	YELLOW	A							YES	SALEABLE	
33471-6011	BLACK	A						6	—	SALEABLE	
33471-6012	LT.GRAY	B						6	—	SALEABLE	
33471-6015	YELLOW	A						6	—	SALEABLE	
33471-6016	BLACK	A						6	YES	SALEABLE	
33471-6017	LT.GRAY	B						6	YES	SALEABLE	
33471-6020	YELLOW	A						6	YES	SALEABLE	
33471-6021	BLACK	A	1					6	—	SALEABLE	
33471-6022	LT.GRAY	B	1					6	—	SALEABLE	
33471-6025	YELLOW	A	1					6	—	SALEABLE	
33471-6026	BLACK	A	1					6	YES	SALEABLE	
33471-6027	LT.GRAY	B	1					6	YES	SALEABLE	
33471-6030	YELLOW	A	1					6	YES	SALEABLE	
33471-6031	BLACK	A	1	2	3	4	5	6	—	SALEABLE	
33471-6032	LT.GRAY	B	1	2	3	4	5	6	—	SALEABLE	
33471-6035	YELLOW	A	1	2	3	4	5	6	—	SALEABLE	
33471-6050	BLACK	A					5	6	—	SALEABLE	
33471-6051	BLACK	A	1	2	3	4	5	6	YES	SALEABLE	
33471-6052	BLACK	A				4			YES	SALEABLE	
33471-6053	BLACK	A			3				YES	SALEABLE	
33471-6054	BLACK	A			3				—	SALEABLE	
33471-6055	BLACK	A			3	4	5		—	SALEABLE	
33471-6056	BLACK	A					5		—	SALEABLE	
33471-6057	BLACK	A				4			—	SALEABLE	
33471-6058	BLACK	A	1	2	3	4			—	SALEABLE	
33471-6059	DARK GRAY	C							—	SALEABLE	
33471-6060	STONE GRAY	D							—	SALEABLE	
33471-6061	DARK GRAY	C							YES	SALEABLE	
33471-6062	STONE GRAY	D							YES	SALEABLE	
33471-6063	DARK GRAY	C						6	—	SALEABLE	
33471-6064	STONE GRAY	D						6	—	SALEABLE	
33471-6065	DARK GRAY	C						6	YES	SALEABLE	
33471-6066	STONE GRAY	D						6	YES	SALEABLE	
33471-6067	DARK GRAY	C	1					6	—	SALEABLE	
33471-6068	STONE GRAY	D	1					6	—	SALEABLE	
33471-6069	DARK GRAY	C	1					6	YES	SALEABLE	
33471-6070	STONE GRAY	D	1					6	YES	SALEABLE	
33471-6071	DARK GRAY	C	1	2	3	4	5	6	—	SALEABLE	
33471-6072	STONE GRAY	D	1	2	3	4	5	6	—	SALEABLE	
33471-6073	BLACK	A			3			6	—	SALEABLE	
33471-6074	BLACK	A		2					—	SALEABLE	
33471-6075	BLACK	A	1		3		5		YES	SALEABLE	
33471-6076	BLACK	A	1						—	SALEABLE	
33471-6077	BLACK	A		2	3	4			—	SALEABLE	
33471-6078	BLACK	A				4	5		—	SALEABLE	
33471-6079	BLACK	A	1						YES	SALEABLE	
33471-6080	BLACK	A			3	4			YES	SALEABLE	
33471-6081	LT.GRAY	B	1	2			5		YES	SALEABLE	

DOCUMENT STATUS	P1	RELEASE DATE	2021/07/08 11:19:18

FUNCTIONAL SYMBOLS
FA = 0
FC = 0
FP = 0

DIVISIONAL SYMBOLS

THIS DRAWING CONTAINS INFORMATION THAT IS PROPRIETARY TO MOLEX ELECTRONIC TECHNOLOGIES, LLC AND SHOULD NOT BE USED WITHOUT WRITTEN PERMISSION

DIMENSION UNITS	SCALE
mm	1:1

GENERAL TOLERANCES (UNLESS SPECIFIED)

ANGULAR TOL	± 3.0 °
4 PLACES	±
3 PLACES	±
2 PLACES	± 0.1
1 PLACE	± 0.3
0 PLACES	±

DRAFT WHERE APPLICABLE MUST REMAIN WITHIN DIMENSIONS

CURRENT REV DESC: SEE REVISION TABLE

EC NO: 669011
DRWN: SCV 2021/07/02
CHK'D: GGA 2021/07/08
APPR: GGA 2021/07/08

INITIAL REVISION:
DRWN: DGRIFFITHS 2005/08/26
APPR: smarceau 2005/08/29

molex

MX150 1X6 RECEPTACLE
SEALED ASSEMBLY MAT SEAL

PRODUCT CUSTOMER DRAWING

DOCUMENT NUMBER	DOC TYPE	DOC PART	REVISION
SD-33471-061	PSD	001	U5

THIRD ANGLE PROJECTION | DRAWING: D-SIZE | SERIES: 33471

MATERIAL NUMBER	CUSTOMER	SHEET NUMBER
SEE TABLE	GENERAL MARKET	6 OF 6