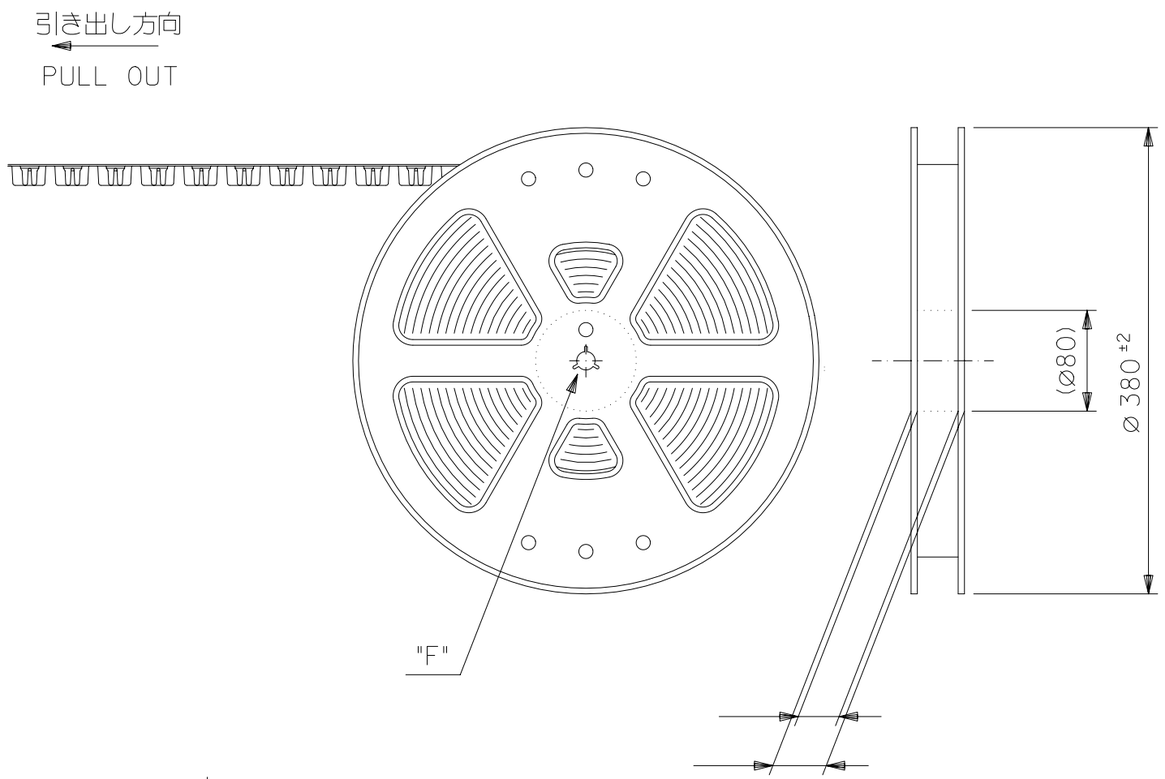

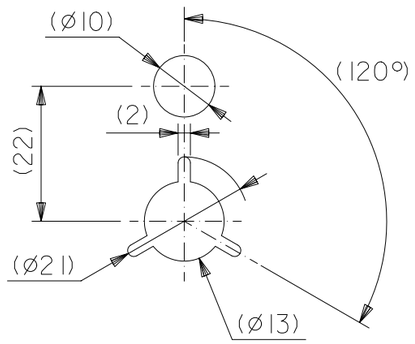

DETAIL "F"

NOTE

1. 製品詳細寸法については528081002_000を参照下さい。
   RE DETAILED DIMENSION, SEE 528081002_000

2. 梱包数量:1000個/リール
   NUMBER OF CONNECTORS:1000PCS/REEL

3. リードテープ長さ LEAD　TAPE LENGTH

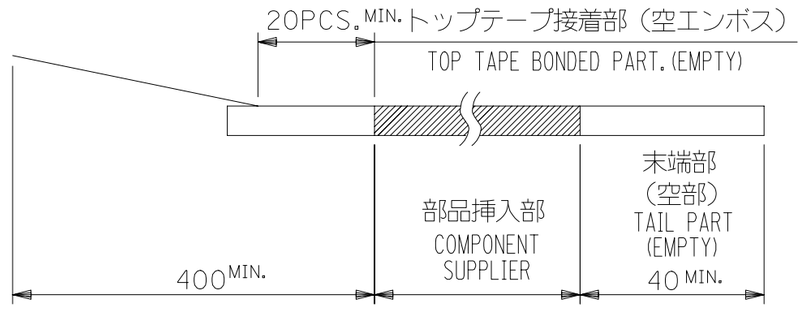

4. カバーテープの剥離強度については IEC 60286-3 に準拠
   COVER TAPE PEEL FORCE IS DEFINED BY IEC 60286-3

5. 材料（ MATERIAL ）
   キャリアテープ(CARRIER TAPE):ポリプロピレン(POLYPROPYLENE)
   トップテープ(TOP TAPE):PET,PE, PEF
   リール(REEL):ポリスチレン(PS)〈リサイクル材を含む〉
   POLYSTYREN(PS) 〈RECYCLE MATERIAL CONTAINED〉

6. 本製品は52808シリーズの金メッキ品です。
   THIS PRODUCT IS Au PLATING OF 52808 SERIES.

7. ELV 及び RoHS適合品
   ELV AND RoHS COMPLIANT.

THIS DRAWING CONTAINS INFORMATION THAT IS PROPRIETARY TO MOLEX ELECTRONIC TECHNOLOGIES, LLC AND SHOULD NOT BE USED WITHOUT WRITTEN PERMISSION

DIMENSION UNITS	mm
SCALE	1:1
GENERAL TOLERANCES (UNLESS SPECIFIED)	
ANGULAR TOL ±	0.0 °
4 PLACES ±	0.0
3 PLACES ±	0.0
2 PLACES ±	0.0
1 PLACE ±	0.0
0 PLACES ±	0.0
DRAFT WHERE APPLICABLE MUST REMAIN WITHIN DIMENSIONS	

CURRENT REV DESC: OBSOLETE PART NUMBER

EC NO: 641324
DRWN: AKUMAR19 2020/03/18
CHK'D: GGA 2020/08/27
APPR: GGA 2020/08/27
INITIAL REVISION:
DRWN: MTAKAHASHI04 2016/01/29
APPR: TKUSUHARA01 2016/02/12

molex

1.0 FFC CONN NON ZIF SMT ST PKG

PRODUCT CUSTOMER DRAWING

THIRD ANGLE PROJECTION	DRAWING	SERIES	MATERIAL NUMBER	CUSTOMER	SHEET NUMBER
	A3-SIZE	52808	SEE TABLE	GENERAL	1 OF 5

DOCUMENT NUMBER	DOC TYPE	DOC PART	REVISION
528080002	PSD	000	B

DOCUMENT STATUS	P1	RELEASE DATE	2020/08/27 08:37:34

FORMAT: master_sheet-A3
REVISION: J
DATE: 2020/01/14

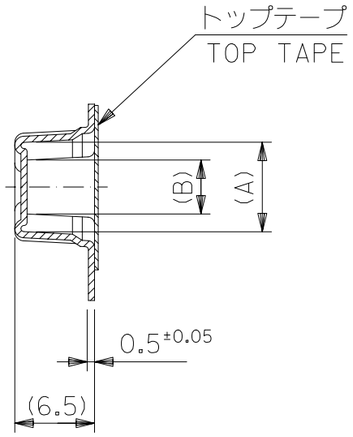

SECT:Y-Y

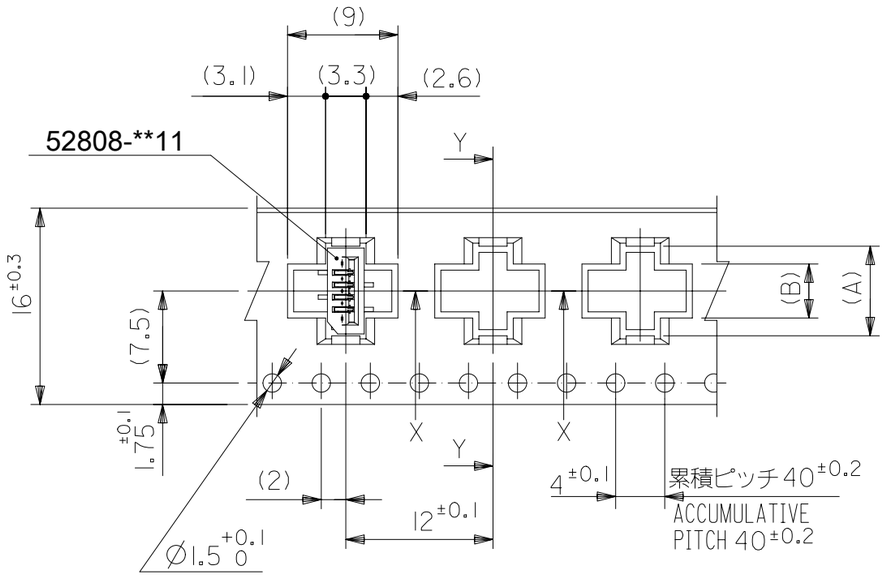

引き出し方向
PULL OUT DIRECTION

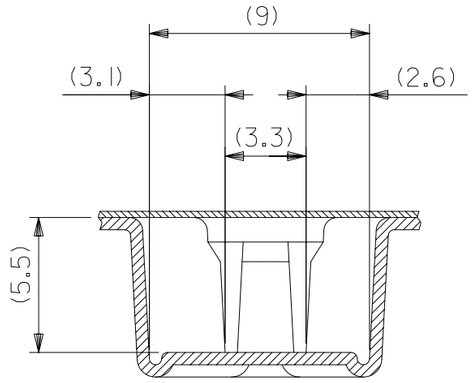

SECT:X-X

１６mm幅キャリアテープ

16mm WIDTH CARRIER TAPE

16	21.4	17.4	5.4	8.3	52808-0572	5
			4.4	7.3	52808-0472	4
キャリアテープ幅 CARRIER TAPE WIDTH	D	C	(B)	(A)	EMBOSSED PACKAGE オーダー番号 ORDER NO.	極数 CKT.

MODEL NO. 52808-**72

THIS DRAWING CONTAINS INFORMATION THAT IS PROPRIETARY TO MOLEX ELECTRONIC TECHNOLOGIES, LLC AND SHOULD NOT BE USED WITHOUT WRITTEN PERMISSION

DIMENSION UNITS	mm
SCALE	1:1
GENERAL TOLERANCES (UNLESS SPECIFIED)	
ANGULAR TOL ±	0.0 °
4 PLACES ±	0.0
3 PLACES ±	0.0
2 PLACES ±	0.0
1 PLACE ±	0.0
0 PLACES ±	0.0
DRAFT WHERE APPLICABLE MUST REMAIN WITHIN DIMENSIONS	

CURRENT REV DESC: OBSOLETE PART NUMBER

EC NO: 641324
DRWN: AKUMAR19 2020/03/18
CHK'D: GGA 2020/08/27
APPR: GGA 2020/08/27

INITIAL REVISION:
DRWN: MTAKAHASHI04 2016/01/29
APPR: TKUSUHARA01 2016/02/12

THIRD ANGLE PROJECTION	DRAWING	SERIES
	A3-SIZE	52808

molex

1.0 FFC CONN NON ZIF SMT ST PKG

PRODUCT CUSTOMER DRAWING

DOCUMENT NUMBER	DOC TYPE	DOC PART	REVISION
528080002	PSD	000	B

MATERIAL NUMBER	CUSTOMER	SHEET NUMBER
SEE TABLE	GENERAL	2 OF 5

DOCUMENT STATUS	P1	RELEASE DATE	2020/08/27 08:37:34

FORMAT: master_Sheet-A3
REVISION: J
DATE: 2020/01/14

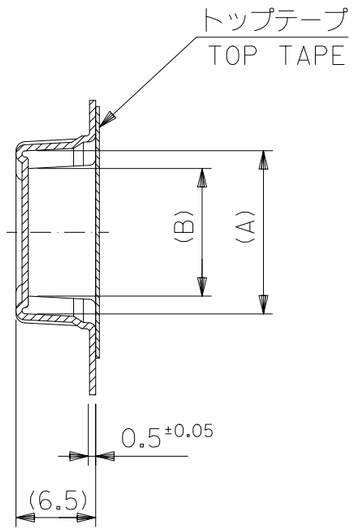

SECT:Y-Y

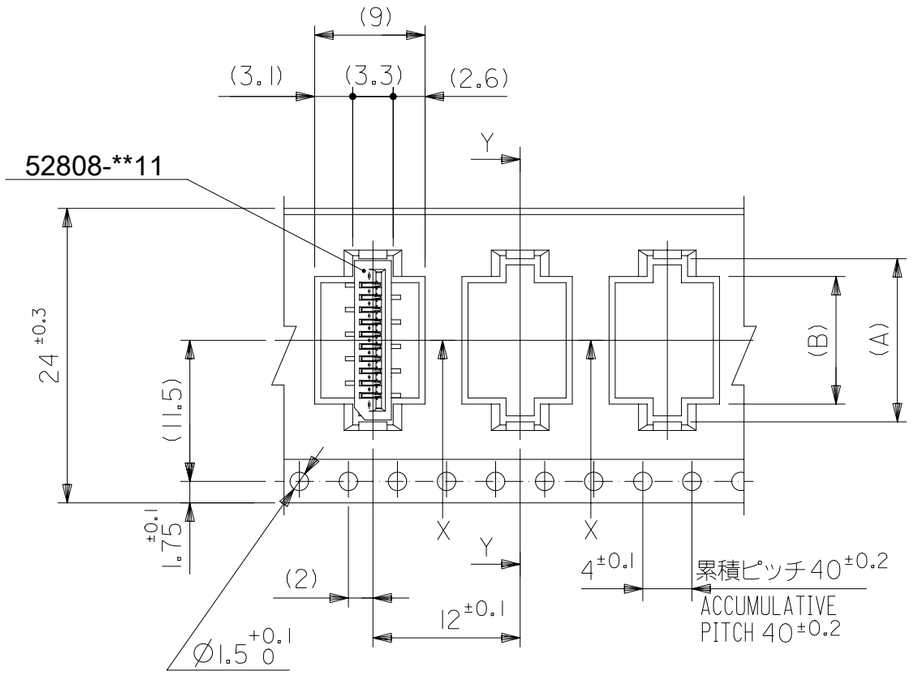

引き出し方向
PULL OUT DIRECTION

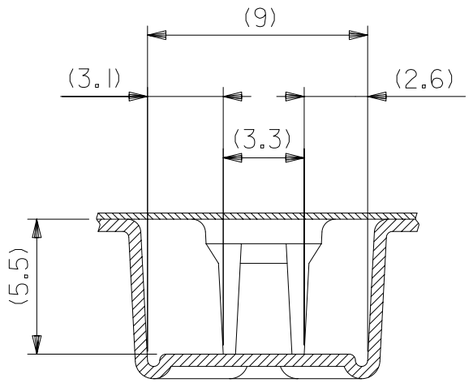

SECT:X-X

２４mm幅キャリアテープ
24mm WIDTH CARRIER TAPE

キャリアテープ幅 CARRIER TAPE WIDTH	D	C	(B)	(A)	EMBOSSED PACKAGE オーダー番号 ORDER NO.	極数 CKT.
24	29.4	25.4	9.4	12.3	52808-0972	9
			8.4	11.3	52808-0872	8
			6.4	9.3	52808-0672	6

MODEL NO. 52808-**72

THIS DRAWING CONTAINS INFORMATION THAT IS PROPRIETARY TO MOLEX ELECTRONIC TECHNOLOGIES, LLC AND SHOULD NOT BE USED WITHOUT WRITTEN PERMISSION

DIMENSION UNITS	SCALE
mm	1:1

GENERAL TOLERANCES (UNLESS SPECIFIED)

ANGULAR TOL	±	0.0 °
4 PLACES	±	0.0
3 PLACES	±	0.0
2 PLACES	±	0.0
1 PLACE	±	0.0
0 PLACES	±	0.0

DRAFT WHERE APPLICABLE MUST REMAIN WITHIN DIMENSIONS

CURRENT REV DESC: OBSOLETE PART NUMBER

EC NO: 641324
DRWN: AKUMAR19 2020/03/18
CHK'D: GGA 2020/08/27
APPR: GGA 2020/08/27

INITIAL REVISION:
DRWN: MTAKAHASHI04 2016/01/29
APPR: TKUSUHARA01 2016/02/12

molex

1.0 FFC CONN NON ZIF SMT ST PKG

PRODUCT CUSTOMER DRAWING

DOCUMENT NUMBER	DOC TYPE	DOC PART	REVISION
528080002	PSD	000	B

THIRD ANGLE PROJECTION	DRAWING	SERIES	MATERIAL NUMBER	CUSTOMER	SHEET NUMBER
	A3-SIZE	52808	SEE TABLE	GENERAL	3 OF 5

DOCUMENT STATUS	P1	RELEASE DATE	2020/08/27 08:37:34

FORMAT: master_Sheet-A3
REVISION: J
DATE: 2020/01/1

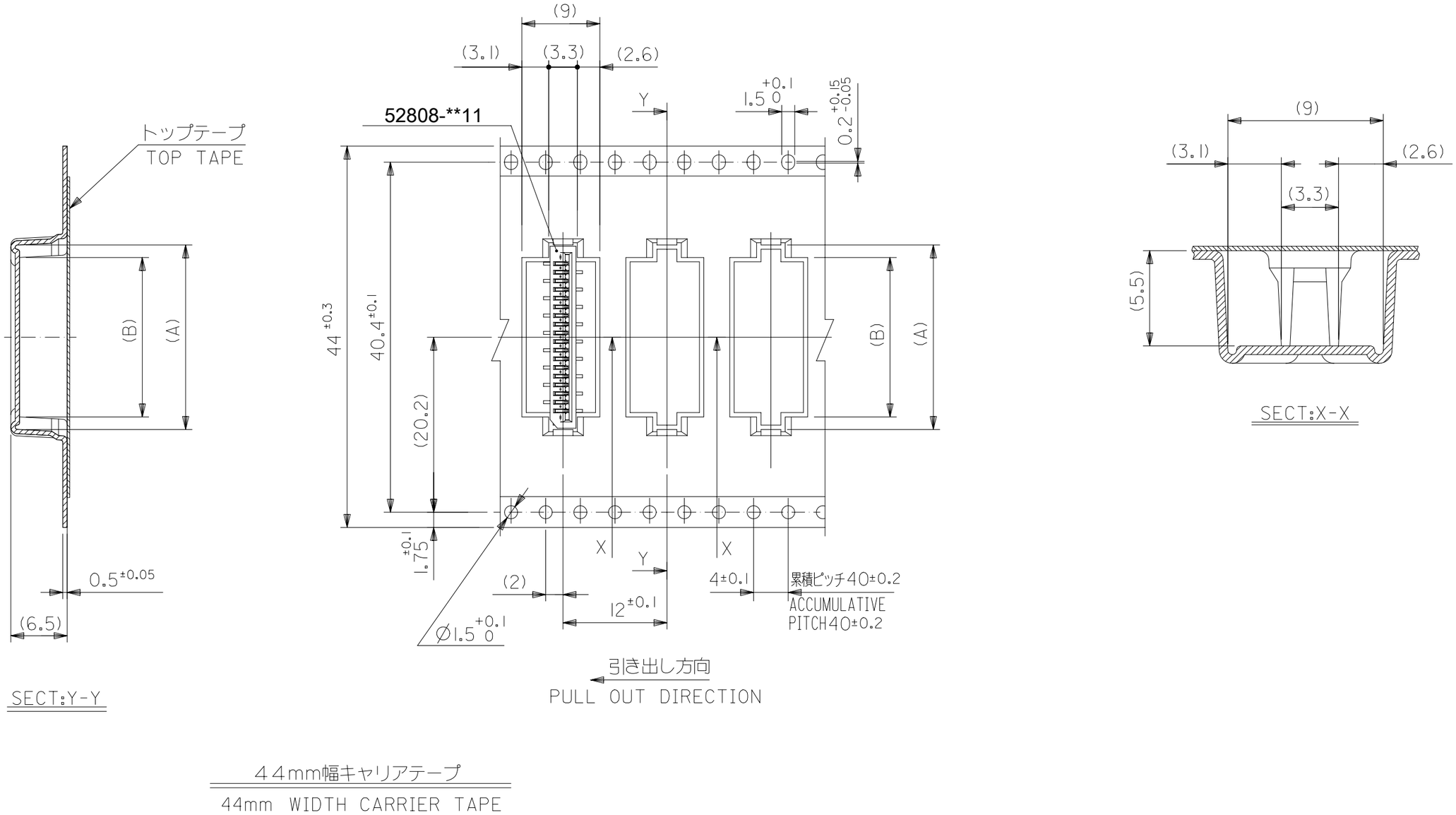

44mm幅キャリアテープ

44mm WIDTH CARRIER TAPE

44	49.4	45.4	20.4	23.3	52808-2072	20
キャリアテープ幅 CARRIER TAPE WIDTH	D	C	(B)	(A)	EMBOSSED PACKAGE オーダー番号 ORDER NO.	極数 CKT.

MODEL NO. 52808-**72

THIS DRAWING CONTAINS INFORMATION THAT IS PROPRIETARY TO MOLEX ELECTRONIC TECHNOLOGIES, LLC AND SHOULD NOT BE USED WITHOUT WRITTEN PERMISSION

DIMENSION UNITS	SCALE
mm	1:1

GENERAL TOLERANCES (UNLESS SPECIFIED)

ANGULAR TOL	±	0.0°
4 PLACES	±	0.0
3 PLACES	±	0.0
2 PLACES	±	0.0
1 PLACE	±	0.0
0 PLACES	±	0.0

DRAFT WHERE APPLICABLE MUST REMAIN WITHIN DIMENSIONS

CURRENT REV DESC: OBSOLETE PART NUMBER

EC NO: 641324
DRWN: AKUMAR19 2020/03/18
CHK'D: GGA 2020/08/27
APPR: GGA 2020/08/27

INITIAL REVISION:
DRWN: MTAKAHASHI04 2016/01/29
APPR: TKUSUHARA01 2016/02/12

molex

1.0 FFC CONN NON ZIF SMT ST PKG

PRODUCT CUSTOMER DRAWING

DOCUMENT NUMBER	DOC TYPE	DOC PART	REVISION
528080002	PSD	000	B

THIRD ANGLE PROJECTION	DRAWING	SERIES	MATERIAL NUMBER	CUSTOMER	SHEET NUMBER
	A3-SIZE	52808	SEE TABLE	GENERAL	4 OF 5

DOCUMENT STATUS	P1	RELEASE DATE	2020/08/27 08:37:34

FORMAT: master-tb-mod-A3
REVISION: J
DATE: 2020/01/14

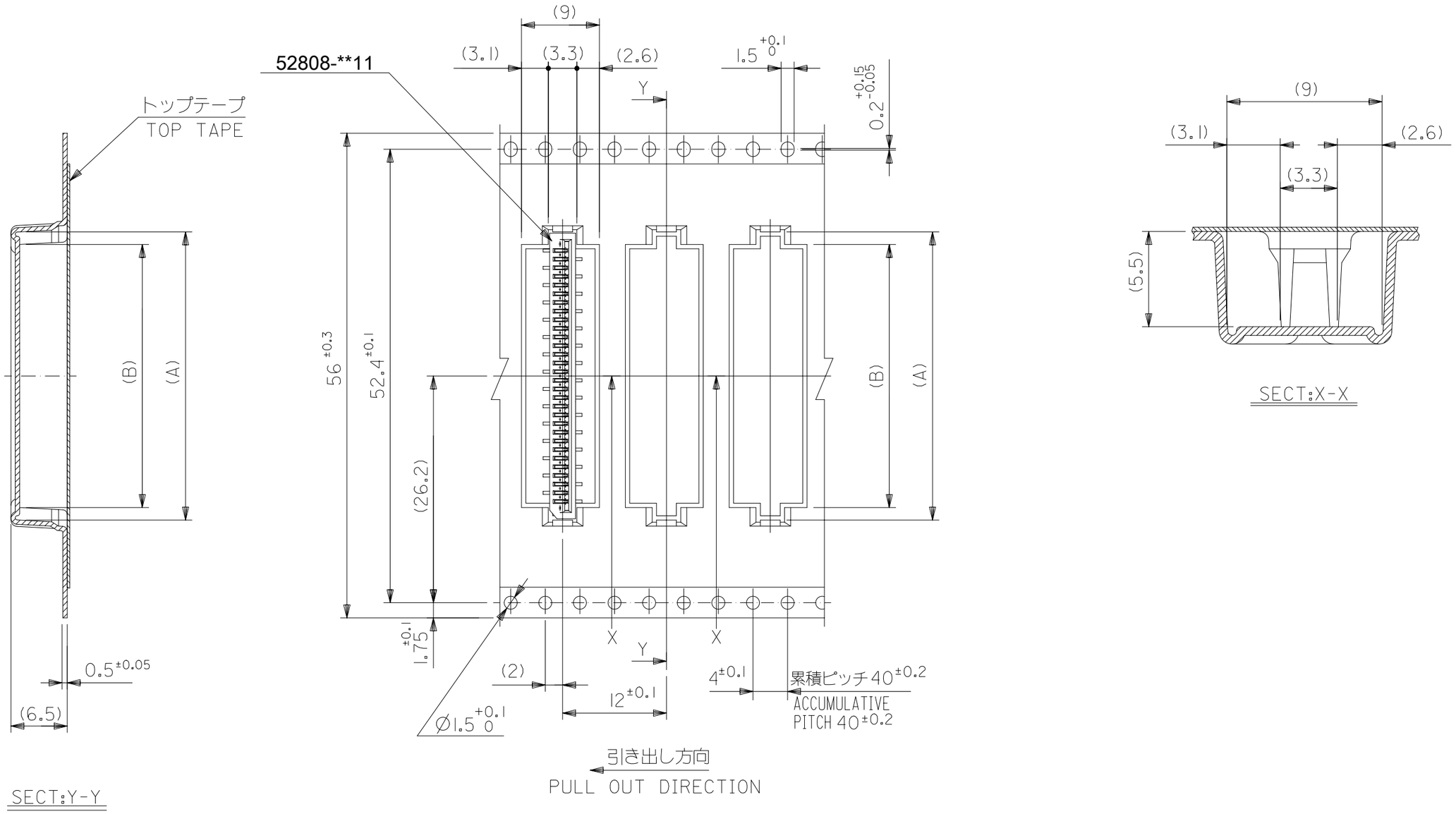

56mm幅キャリアテープ

56mm WIDTH CARRIER TAPE

56	61.4	57.4	30.4	33.3	52808-3072	30
キャリアテープ幅 CARRIER TAPE WIDTH	D	C	(B)	(A)	EMBOSSED PACKAGE オーダー番号 ORDER NO.	極数 CKT.

MODEL NO. 52808-**72

THIS DRAWING CONTAINS INFORMATION THAT IS PROPRIETARY TO MOLEX ELECTRONIC TECHNOLOGIES, LLC AND SHOULD NOT BE USED WITHOUT WRITTEN PERMISSION

DIMENSION UNITS	SCALE
mm	1:1

GENERAL TOLERANCES (UNLESS SPECIFIED)

ANGULAR TOL	±	0.0°
4 PLACES	±	0.0
3 PLACES	±	0.0
2 PLACES	±	0.0
1 PLACE	±	0.0
0 PLACES	±	0.0

DRAFT WHERE APPLICABLE MUST REMAIN WITHIN DIMENSIONS

CURRENT REV DESC: OBSOLETE PART NUMBER

EC NO: 641324
DRWN: AKUMAR19 2020/03/18
CHK'D: GGA 2020/08/27
APPR: GGA 2020/08/27

INITIAL REVISION:
DRWN: MTAKAHASHI04 2016/01/29
APPR: TKUSUHARA01 2016/02/12

THIRD ANGLE PROJECTION | DRAWING A3-SIZE | SERIES 52808

molex

1.0 FFC CONN NON ZIF SMT ST PKG

PRODUCT CUSTOMER DRAWING

DOCUMENT NUMBER	DOC TYPE	DOC PART	REVISION
528080002	PSD	000	B

MATERIAL NUMBER	CUSTOMER	SHEET NUMBER
SEE TABLE	GENERAL	5 OF 5

DOCUMENT STATUS	P1	RELEASE DATE	2020/08/27 08:37:34

FORMAT: master-thumbnail-A3
REVISION: J
DATE: 2020/01/14

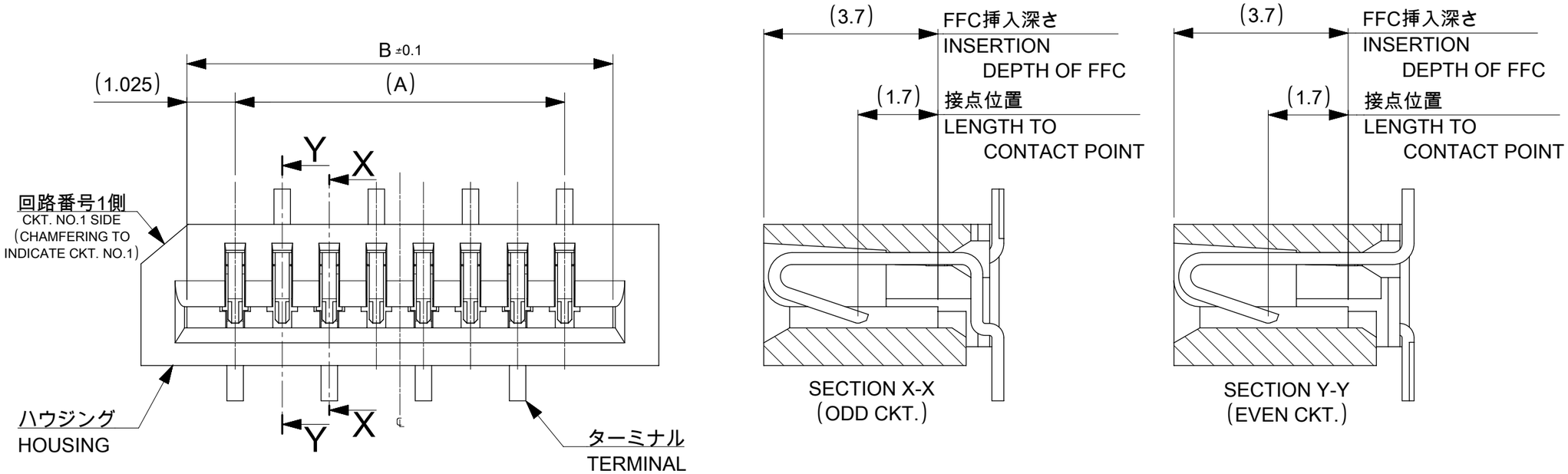

C	B	A	EMBOSSED PACKAGE オーダー番号 ORDER NO.	Ckt
33	31.05	29	52808-3072	30
23	21.05	19	52808-2072	20
12	10.05	8	52808-0972	9
11	9.05	7	52808-0872	8
9	7.05	5	52808-0672	6
8	6.05	4	52808-0572	5
7	5.05	3	52808-0472	4

THIS DRAWING CONTAINS INFORMATION THAT IS PROPRIETARY TO MOLEX ELECTRONIC TECHNOLOGIES, LLC AND SHOULD NOT BE USED WITHOUT WRITTEN PERMISSION

DIMENSION UNITS	SCALE
mm	10:1

GENERAL TOLERANCES (UNLESS SPECIFIED)

ANGULAR TOL	±	1.0 °
4 PLACES	±	0.05
3 PLACES	±	0.1
2 PLACES	±	0.2
1 PLACE	±	0.2
0 PLACES	±	0.2

DRAFT WHERE APPLICABLE MUST REMAIN WITHIN DIMENSIONS

CURRENT REV DESC: OBSOLETE PART NUMBER

EC NO: 641324
DRWN: AKUMAR19 2020/03/18
CHK'D: GGA 2020/08/27
APPR: GGA 2020/08/27

INITIAL REVISION:
DRWN: MTAKAHASHI04 2016/01/29
APPR: TKUSUHARA01 2016/02/12

THIRD ANGLE PROJECTION | DRAWING A3-SIZE | SERIES 52808

molex

1.0 FFC CONN NON ZIF SMT ST ASSY

PRODUCT CUSTOMER DRAWING

DOCUMENT NUMBER	DOC TYPE	DOC PART	REVISION
528081002	PSD	000	B

MATERIAL NUMBER	CUSTOMER	SHEET NUMBER
SEE TABLE	GENERAL	1 OF 3

DOCUMENT STATUS	P1	RELEASE DATE	2020/08/27 08:37:42

FORMAT: master-tb-mod-A3
REVISION: J
DATE: 2020/01/14

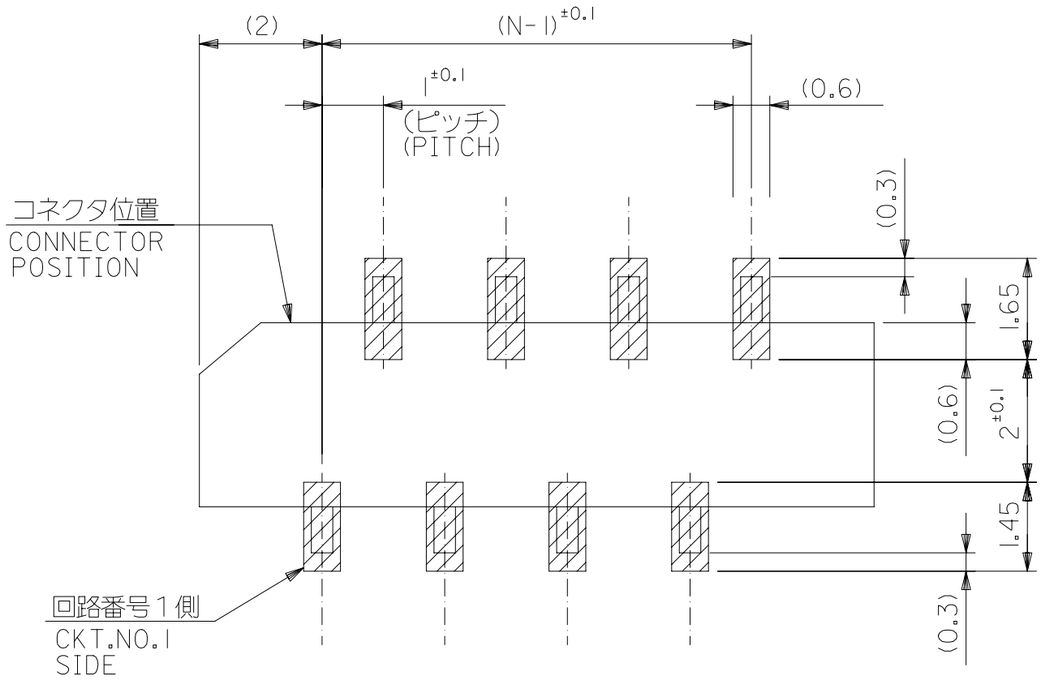

推奨基板レイアウト
RECOMMENDED P.C.BOARD
PATTERN DIMENSION
（マウント面）
(MOUNTING SIDE)

参考メタルマスク厚 : 120μm
参考メタルマスク開口率 : 100%
REFERENCE SCREEN THICKNESS : 120μm
REFERENCE SCREEN OPEN RATIO : 100%

注記 NOTES

1. 使用材料 MATERIAL
   ハウジング：ポリフェニレンサルファイド(PPS)　ナチュラル(白色)　ガラス充填　UL94V-0
   HOUSING　POLY PHENYLENE SULFIDE NATURAL(WHITE) GLASS FILLED UL94V-0
   ターミナル：リン青銅(t=0.25)
   TERMINAL　PHOSPHOR BRONZE (t=0.25)

2. めっき仕様　PLATING
   ターミナル　TERMINAL
   接点部　：金メッキ(0.1μm以上)
   半田付部：錫メッキ(1.0μm以上)
   下地　：ニッケルメッキ(1.0μm以上)
   CONTACT PORTION　: GOLD PLATING (0.1μm MIN)
   SOLDERING PORTION : TIN PLATING (1.0μm MIN)
   UNDER PLATING　: NICKEL PLATING (1.0μm MIN)

3. 基準面 E からのソルダーテールの半田付け面のズレ量は、
   上方向に0.1MAX、 下方向に0.15MAXとする。
   MISALIGNMENT OF SOLDER TAIL FROM E
   UPPER DIRECTION 0.1 MAX , LOWER DIRECTION 0.15 MAX.

4. 偶数極に適用。
   APPLY FOR EVEN CKT.

5. 本製品は 52808シリーズの金メッキ品です。
   THIS PRODUCT IS Au PLATING OF 52808 SERIES.

6. ELV 及び　RoHS適合品。
   ELV AND RoHS COMPLIANT.

THIS DRAWING CONTAINS INFORMATION THAT IS PROPRIETARY TO MOLEX ELECTRONIC TECHNOLOGIES, LLC AND SHOULD NOT BE USED WITHOUT WRITTEN PERMISSION

DIMENSION UNITS	SCALE
mm	1:1

GENERAL TOLERANCES (UNLESS SPECIFIED)

ANGULAR TOL	±	1.0°
4 PLACES	±	0.05
3 PLACES	±	0.1
2 PLACES	±	0.2
1 PLACE	±	0.2
0 PLACES	±	0.2

DRAFT WHERE APPLICABLE MUST REMAIN WITHIN DIMENSIONS

CURRENT REV DESC: OBSOLETE PART NUMBER

EC NO: 641324
DRWN: AKUMAR19 2020/03/18
CHK'D: GGA 2020/08/27
APPR: GGA 2020/08/27

INITIAL REVISION:
DRWN: MTAKAHASHI04 2016/01/29
APPR: TKUSUHARA01 2016/02/12

molex

1.0 FFC CONN NON ZIF SMT ST ASSY

PRODUCT CUSTOMER DRAWING

DOCUMENT NUMBER	DOC TYPE	DOC PART	REVISION
528081002	PSD	000	B

THIRD ANGLE PROJECTION	DRAWING	SERIES	MATERIAL NUMBER	CUSTOMER	SHEET NUMBER
	A3-SIZE	52808	SEE TABLE	GENERAL	2 OF 3

DOCUMENT STATUS	P1	RELEASE DATE	2020/08/27 08:37:42

FORMAT: master-tb-mod-A3
REVISION: J
DATE: 2020/01/14

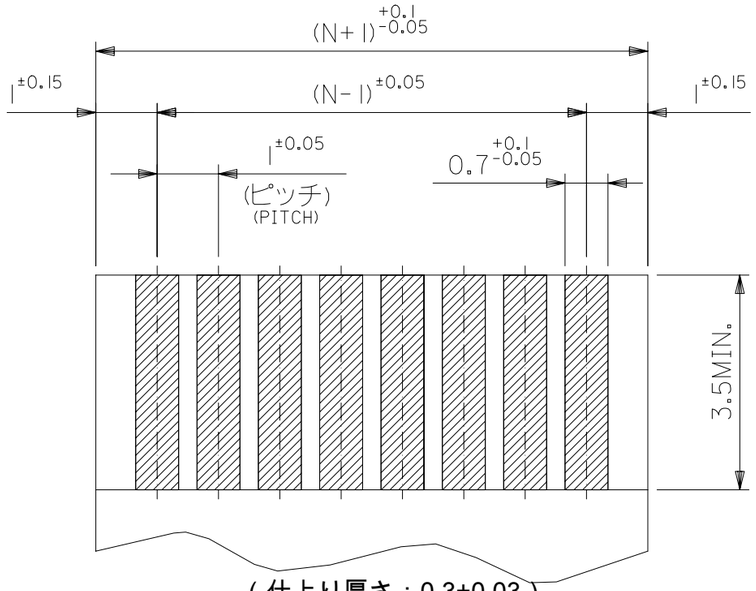

(仕上り厚さ：0.3±0.03)
(THICKNESS：0.3±0.03)

適合金メッキFPC/FFC推奨寸法
APPLICABLE GOLD FPC/FFC
RECOMMENDED DIMENSION

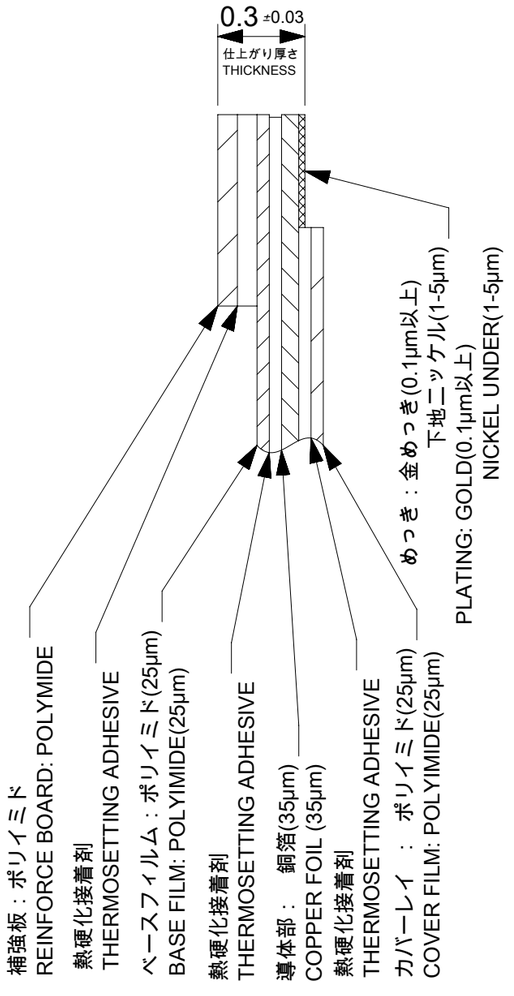

FPC構成推奨仕様
STRUCTURE OF FPC

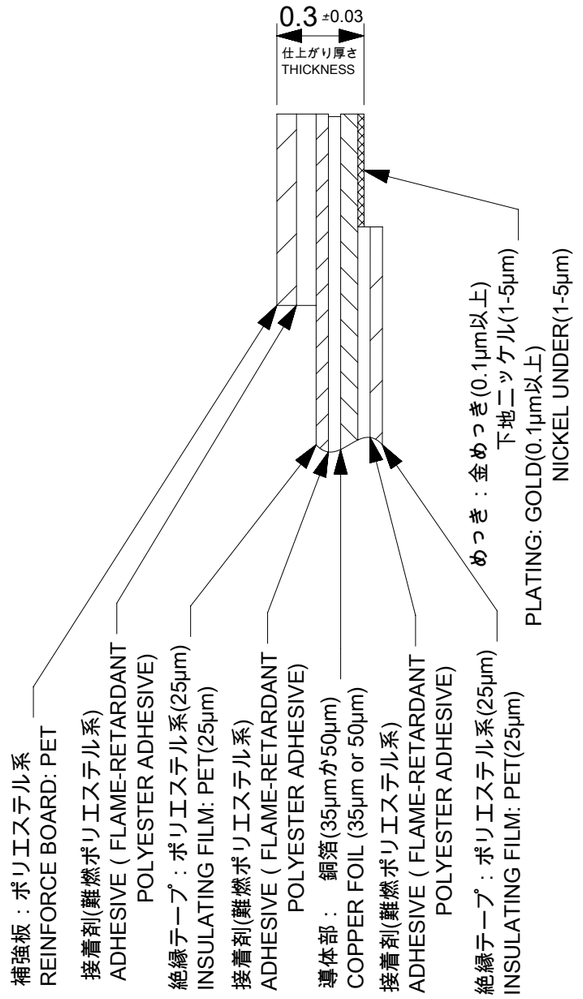

FFC構成推奨仕様
STRUCTURE OF FFC

FPC/FFCについて
打ち抜き方向は導体側から補強板側を推奨致します。
導体部については軟箔銅35μmまたは50μmを推奨致します。
接着剤の接点部への付着は導通不良の原因になりますので、染み出しが無い様お願い致します。
FPC/FFCに規定された定格温度がFPC/FFC単体前提である場合が御座います。
コネクタと組み合わせての実使用において、接着層が劣化する等の信頼性を満足できないケースを回避する為、実機での評価/確認をお願い致します。
ABOUT FPC/FFC
RECOMMENDED PUNCHING DIRECTION: FROM CONDUCTOR SIDE TO STIFFENER SIDE
RECOMMENDED CONDUCTOR SPEC: SOFT COPPER FOIL
RECOMMENDED CONDUCTOR THICKNESS: 35 MICROMETER OR 50 MICROMETER
PLEASE PUT APPROPRIATE AMOUNT OF ADHESIVE ON ADHEREND BECAUSE THERE IS A POSSIBILITY THAT EXTRA ADHESIVE CAUSES THE DEFECT IN ELECTRICAL CONTINUITY
THE HEAT RESISTANCE OF FFC IS ONLY FFC SPEC
TO PREVENT THE CASE THAT RELIABILITY CANNOT BE SATISFIED (THE ADHESIVE IS DETERIORATED etc,) PLEASE DO THE EVALUATION AND THE CONFIRMATION WITH ACTUAL CONNECTER

FPCについて
補強フィルム材質はポリイミドを推奨します。ベースフィルムは25μmを推奨します。
接着剤は熱硬化接着剤を推奨します。
ABOUT FPC
RECOMMENDED STIFFENER MATERIAL: POLYIMIDE
RECOMMENDED BASE FILM THICKNESS: 25 MICROMETER
RECOMMENDED ADHESIVE: THERMOSETTING ADHESIVE

THIS DRAWING CONTAINS INFORMATION THAT IS PROPRIETARY TO MOLEX ELECTRONIC TECHNOLOGIES, LLC AND SHOULD NOT BE USED WITHOUT WRITTEN PERMISSION

DIMENSION UNITS	SCALE
mm	1:1

GENERAL TOLERANCES (UNLESS SPECIFIED)

ANGULAR TOL	±	1.0 °
4 PLACES	±	0.05
3 PLACES	±	0.1
2 PLACES	±	0.2
1 PLACE	±	0.2
0 PLACES	±	0.2

DRAFT WHERE APPLICABLE MUST REMAIN WITHIN DIMENSIONS

CURRENT REV DESC: OBSOLETE PART NUMBER

EC NO: 641324
DRWN: AKUMAR19 2020/03/18
CHK'D: GGA 2020/08/27
APPR: GGA 2020/08/27

INITIAL REVISION:
DRWN: MTAKAHASHI04 2016/01/29
APPR: TKUSUHARA01 2016/02/12

THIRD ANGLE PROJECTION | DRAWING: A3-SIZE | SERIES: 52808

molex

1.0 FFC CONN NON ZIF SMT ST ASSY

PRODUCT CUSTOMER DRAWING

DOCUMENT NUMBER	DOC TYPE	DOC PART	REVISION
528081002	PSD	000	B

MATERIAL NUMBER	CUSTOMER	SHEET NUMBER
SEE TABLE	GENERAL	3 OF 3

DOCUMENT STATUS	P1	RELEASE DATE	2020/08/27 08:37:42

FORMAT: master-SD-06-A3
REVISION: J
DATE: 2020/01/16