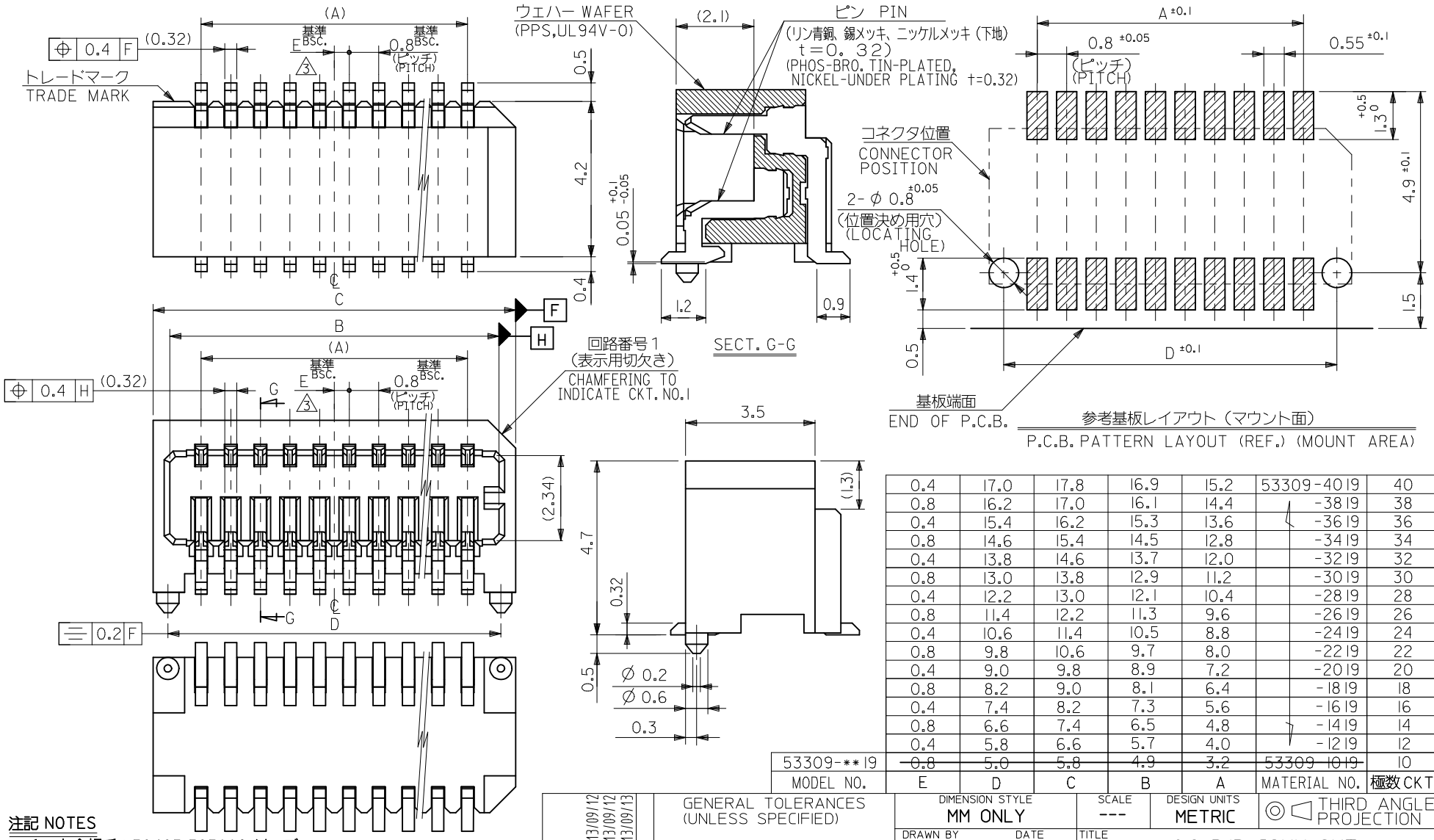

0.4	17.0	17.8	16.9	15.2	53309-4019	40
0.8	16.2	17.0	16.1	14.4	-3819	38
0.4	15.4	16.2	15.3	13.6	-3619	36
0.8	14.6	15.4	14.5	12.8	-3419	34
0.4	13.8	14.6	13.7	12.0	-3219	32
0.8	13.0	13.8	12.9	11.2	-3019	30
0.4	12.2	13.0	12.1	10.4	-2819	28
0.8	11.4	12.2	11.3	9.6	-2619	26
0.4	10.6	11.4	10.5	8.8	-2419	24
0.8	9.8	10.6	9.7	8.0	-2219	22
0.4	9.0	9.8	8.9	7.2	-2019	20
0.8	8.2	9.0	8.1	6.4	-1819	18
0.4	7.4	8.2	7.3	5.6	-1619	16
0.8	6.6	7.4	6.5	4.8	-1419	14
0.4	5.8	6.6	5.7	4.0	-1219	12
~~0.8~~	~~5.0~~	~~5.8~~	~~4.9~~	~~3.2~~	~~53309-1019~~	10
53309-**19						
MODEL NO.	E	D	C	B	A	MATERIAL NO. 極数CKT.

注記 NOTES

1. 嵌合相手：52465,52588シリーズ
   MATE WITH : 52465,52588 SERIES
2. ウェハーの ℄ から隣接するピンの ℄ 迄の位置を示す。
   SHOW POSITION FROM ℄ OF WAFER TO ℄ OF ADJACENT PINS.
3. 本製品は 53309-**17の鉛フリー品である。
   THIS PRODUCT IS LEAD FREE OF 53309-**17.

REVISED
EC NO: J2014-0465 2013/09/12
DRWN:YISHIDA 2013/09/12
CH'KD:TASAKAWA 2013/09/13
APPR:TASAKAWA
DESCRIPTION
A
REV

GENERAL TOLERANCES (UNLESS SPECIFIED)

10 UNDER	±0.2
10 OVER 30 UNDER	±0.25
30 OVER	±0.3
ANGULAR	±3 °

DRAFT WHERE APPLICABLE MUST REMAIN WITHIN DIMENSIONS

DIMENSION STYLE	MM ONLY
SCALE	---
DESIGN UNITS	METRIC
	THIRD ANGLE PROJECTION
DRAWN BY	HKAWABATA
DATE	2004/03/10
CHECKED BY	KTOJO
DATE	2004/03/10
APPROVED BY	MSASAO
DATE	2004/03/10
MATERIAL NO.	SEE DRAWING
DOCUMENT NO.	SD-53309-013
SHEET NO.	1 OF 2
SIZE	A3

TITLE: 0.8 B/B CONN SMT WITH BOSS -LEAD FREE-

molex

THIS DRAWING CONTAINS INFORMATION THAT IS PROPRIETARY TO MOLEX INCORPORATED AND SHOULD NOT BE USED WITHOUT WRITTEN PERMISSION

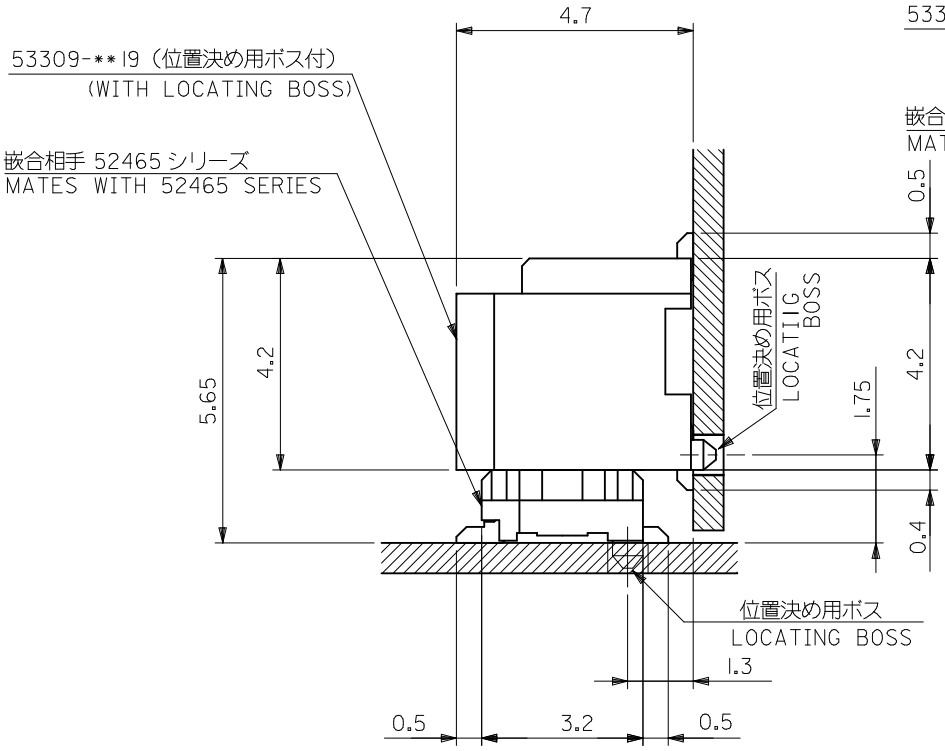

嵌合状態図（参考）
MATED DRAWING(REF.)

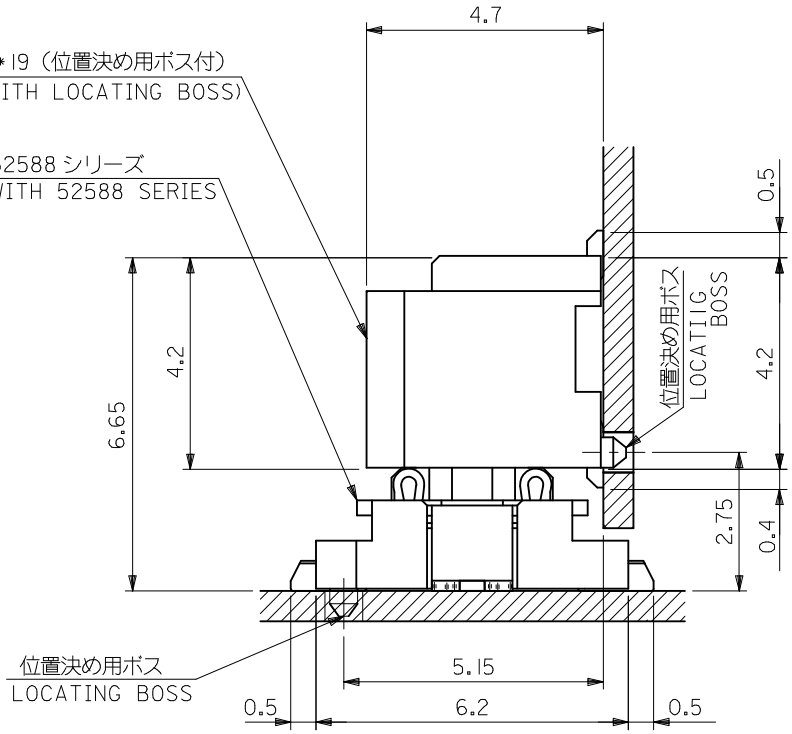

嵌合状態図（参考）
MATED DRAWING(REF.)

MODEL NO.	53309-**19

REVISED			
EC NO: J2014-0465	DRWN:YISHIDA	CH'KD:TASAKAWA	APPR:TASAKAWA
2013/09/13	2013/09/13	2013/09/13	2013/09/13
DESCRIPTION			
A			
REV			

GENERAL TOLERANCES (UNLESS SPECIFIED)

10 UNDER	±0.2
10 OVER 30 UNDER	±0.25
30 OVER	±0.3
ANGULAR	±3 °

DRAFT WHERE APPLICABLE MUST REMAIN WITHIN DIMENSIONS

DIMENSION STYLE: MM ONLY	SCALE: ---	DESIGN UNITS: METRIC	THIRD ANGLE PROJECTION
DRAWN BY: HKAWABATA	DATE: 2004/03/10	TITLE: 0.8 B/B CONN SMT WITH BOSS -LEAD FREE-	
CHECKED BY: KTOJO	DATE: 2004/03/10		
APPROVED BY: MSASAO	DATE: 2004/03/10	molex	
MATERIAL NO.: REFER TO SHEET 1 OF 2		DOCUMENT NO.: SD-53309-013	SHEET NO.: 2 OF 2

SIZE A3

THIS DRAWING CONTAINS INFORMATION THAT IS PROPRIETARY TO MOLEX INCORPORATED AND SHOULD NOT BE USED WITHOUT WRITTEN PERMISSION

注記 NOTES

1. 梱包数量：１０００個／リール NUMBER OF CONNECTORS:1000PCS/REEL
2. リードテープ長さ LEAD TAPE LENGTH

トップテープ TOP TAPE
リーダー部 LEADER PART

トップテープ TOP TAPE
未接着部 NON-BONDED PART

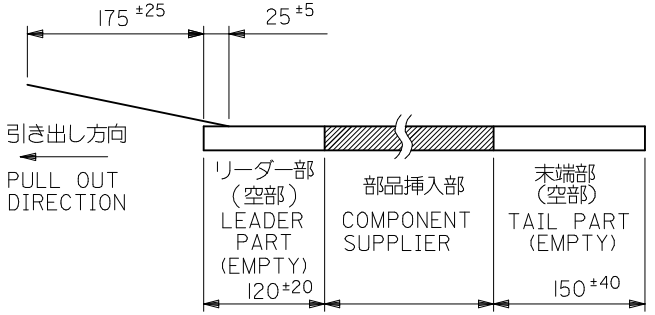

3. トップテープの剥離強度：（剥離方向は下図参照）
０．１～１．３N｛１０～１３０ｇｆ｝尚、本規格値は、出荷時に適用。
（但し、輸送時に剥離が発生しない事。）
PEELING OFF FORCE OF TOP TAPE
0.1～1.3N{10～130gf} (PEELING DIRECTION AS SHOWN IN FOLLOWING FIG.)
THIS REQUIREMENT SHOULD BE APPLITED AT SHIPMENT
PEEL OFF SHOULD NOT BE ALLOWED,
DURING TRANSPORTATION

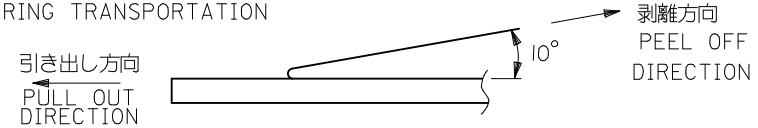

5. 材料(MATERIAL)
キャリアテープ(CARRIER TAPE)：ポリプロピレン(POLYPROPYLENE)
トップテープ(TOPTAPE)：PET ，PE ，PEF
リール(REEL)：ポリスチレン（ＰＳ）<リサイクル材を含む>
POLYSTYREN(PS) <RECYCLE MATERIAL CONTAINED>
6. 本製品は５３３０９－＊＊９０の鉛フリー品である。
THIS PRODUCT IS LEAD FREE OF 53309-**90.

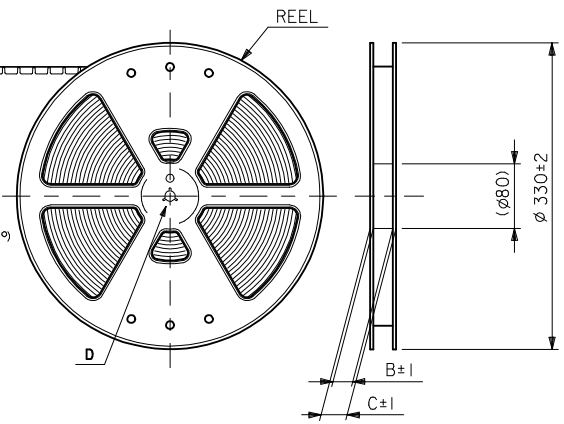

DETAIL D

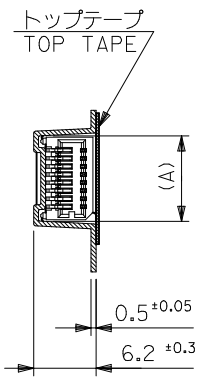

SECT. Z-Z

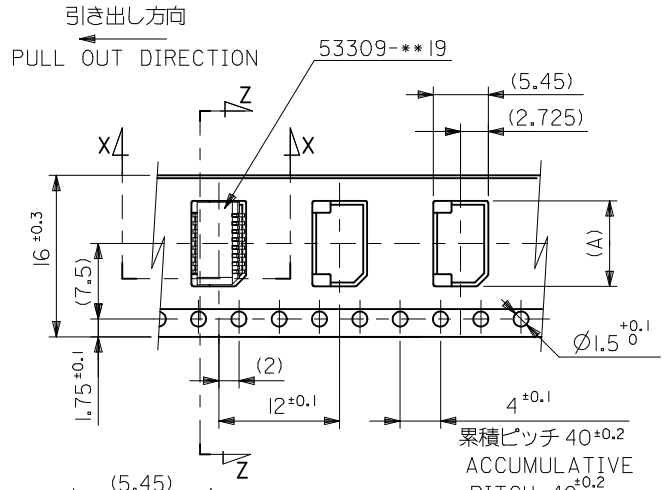

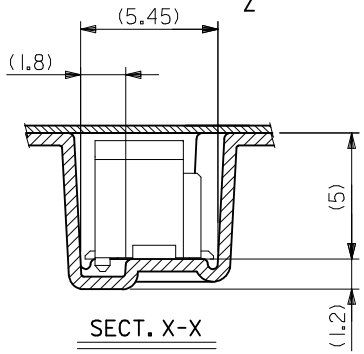

SECT. X-X

16mm幅キャリアテープ
16mm WIDTH CARRIER TAPE

キャリアテープ幅 CARRIER TAPE WIDTH	C	B	(A)	MATERIAL NO.	極数 CIRCUIT
16	21.4	17.4	9.3	53309-1871	18
			8.5	53309-1671	16
			7.7	53309-1471	14
			6.9	53309-1271	12
			~~6.1~~	~~53309-1071~~	10

53309-**71
MODEL NO.

REVISED
EC NO: J2014-0465 2013/09/13
DRWN:YISHIDA 2013/09/13
CH'KD:TASAKAWA 2013/09/13
APPR:TASAKAWA 2013/09/13
DESCRIPTION
REV
A

GENERAL TOLERANCES (UNLESS SPECIFIED)

10 UNDER	±0.2
10 OVER 30 UNDER	±0.25
30 OVER	±0.3
ANGULAR	±3 °

DRAFT WHERE APPLICABLE MUST REMAIN WITHIN DIMENSIONS

DIMENSION STYLE: MM ONLY
SCALE: ---
DESIGN UNITS: METRIC
THIRD ANGLE PROJECTION

DRAWN BY	HKAWABATA
DATE	2004/03/10
CHECKED BY	KTOJO
DATE	2004/03/10
APPROVED BY	MSASAO
DATE	2004/03/10
MATERIAL NO.	SEE NOTES
DOCUMENT NO.	SD-53309-014
SHEET NO.	1 OF 2

TITLE: 0.8 BTB CONN WAFER ASSY EMBSTP PKG -LEAD FREE-

molex

SIZE A3

THIS DRAWING CONTAINS INFORMATION THAT IS PROPRIETARY TO MOLEX INCORPORATED AND SHOULD NOT BE USED WITHOUT WRITTEN PERMISSION

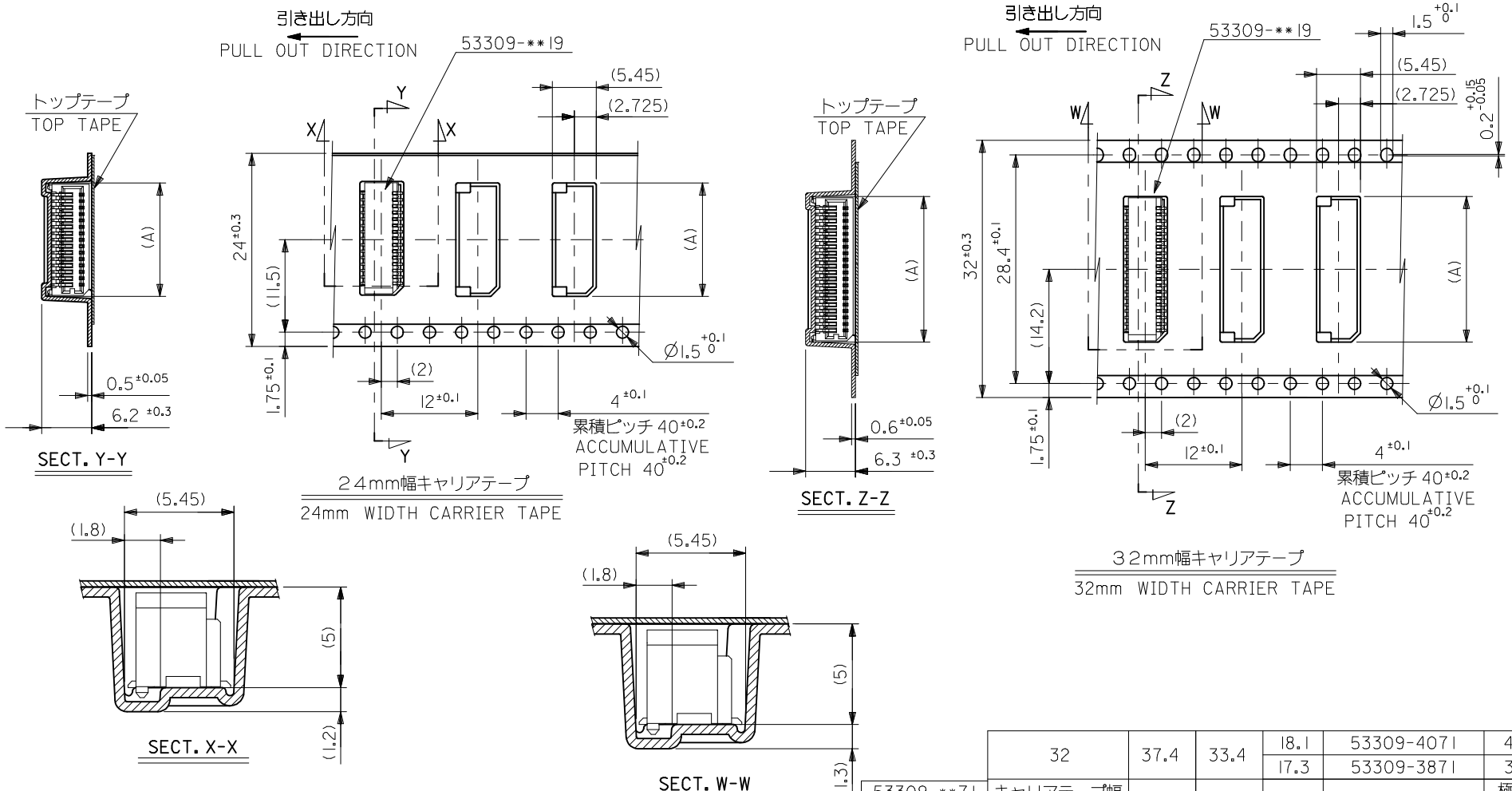

53309-**71 MODEL NO.	キャリアテープ幅 CARRIER TAPE WIDTH	C	B	(A)	MATERIAL NO.	極数 CIRCUIT
		32	37.4	33.4	18.1	53309-4071	40
					17.3	53309-3871	38
		24	29.4	25.4	16.5	53309-3671	36
					15.7	53309-3471	34
					14.9	53309-3271	32
					14.1	53309-3071	30
					13.3	53309-2871	28
					12.5	53309-2671	26
					11.7	53309-2471	24
					10.9	53309-2271	22
					10.1	53309-2071	20

REVISED
EC NO: J2014-0465 2013/09/13
DRWN: YISHIDA 2013/09/13
CH'KD: TASAKAWA 2013/09/13
APPR: TASAKAWA 2013/09/13
DESCRIPTION
REV A

GENERAL TOLERANCES (UNLESS SPECIFIED)

10 UNDER	±0.2
10 OVER 30 UNDER	±0.25
30 OVER	±0.3
ANGULAR	±3 °

DRAFT WHERE APPLICABLE MUST REMAIN WITHIN DIMENSIONS

DIMENSION STYLE: MM ONLY	SCALE: ---	DESIGN UNITS: METRIC	THIRD ANGLE PROJECTION
DRAWN BY: HKAWABATA DATE: 2004/03/10	TITLE: 0.8 BTB CONN WAFER ASSY EMBSTP PKG -LEAD FREE-		
CHECKED BY: KTOJO DATE: 2004/03/10			
APPROVED BY: MSASAO DATE: 2004/03/10	molex		
MATERIAL NO.: REFER TO SHEET 1 OF 2	DOCUMENT NO.: SD-53309-014	SHEET NO.: 2 OF 2	

SIZE A3

THIS DRAWING CONTAINS INFORMATION THAT IS PROPRIETARY TO MOLEX INCORPORATED AND SHOULD NOT BE USED WITHOUT WRITTEN PERMISSION