This document was generated on 09/20/2019

PLEASE CHECK WWW.MOLEX.COM FOR LATEST PART INFORMATION

Part Number: 0732160051
Status: Active
Overview: TNC RF Connectors
Description: 50 Ohms, TNC Plug, Right-Angle for RG-141, RG-303 and RG-58 Cable, Bag

Documents:
Drawing (PDF) | RoHS Certificate of Compliance (PDF)

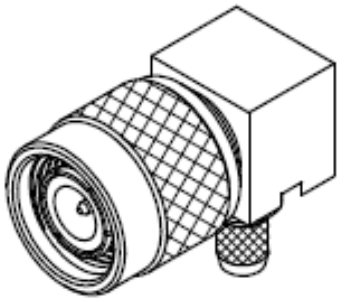

Series image - Reference only

General

Product Family	RF/Coax Connectors
Series	73216
Overview	TNC RF Connectors
Product Name	TNC
Style	Cable
Type	Miniature
UPC	884982653818
Wire/Cable Type	RG-141, RG-303, RG-58

Physical

Gender	Plug
Keying to Mating Part	None
Orientation	Right Angle
PCB Mounting	Through Hole
Packaging Type	Bag
Panel Mount	No
Panel Mount Method	N/A
Reverse Polar	No

Electrical

Frequency	11 GHz
Impedance	50Ω
Power / Voltage	VOLTAGE: 500 Vrms@Sea Level

Material Info

Reference - Drawing Numbers

Sales Drawing	SD-73216-005

EU ELV
Not Reviewed

EU RoHS | **China RoHS**
Not Reviewed
REACH SVHC
Not Reviewed
Halogen-Free Status
Not Reviewed
For more information, please visit Contact US

China ROHS	Not Reviewed
ELV	Not Reviewed
RoHS Phthalates	Not Reviewed

Search Parts in this Series
73216 Series

This document was generated on 09/20/2019

PLEASE CHECK WWW.MOLEX.COM FOR LATEST PART INFORMATION