Part Number : 761655108
Product Description : Impact 100 Ohm 3 Pair Vertical Backplane Header, Right Guide, Open Endwall, 10 Columns, 90 Circuits, Pin Length 5.50mm, Plated Through Hole Dimension 0.39mm, Lead-Free
Series Number : 76165
Status : Active
Product Category : Backplane Connectors

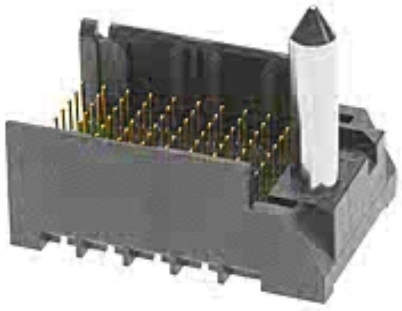

Documents and Resources

Drawings

761655108_sd.pdf

PK-70873-758-001.pdf

3D Models and Design Files

STEP AP242

SOLIDWORKS

Creo

SYM-76165-5108-001.zip

Specifications

AS-76060-990-001.pdf

AS-76060-9999-001.pdf

PS-45499-002-001.pdf

PS-76060-999-001.pdf

Tooling Specifications

ATS-622018647-001.pdf

Product Environment Compliance

Compliance

GADSL/IMDS	Compliant with Exemption 44; 34; 33
China RoHS	per SJ/T 11365-2006
EU ELV	Not Relevant

Low-Halogen Status	Low-Halogen per IEC 61249-2-21
REACH SVHC	Not Contained per D(2025)7771-DC (04 Feb 2026)
EU RoHS	Compliant per EU 2015/863

Compliance Statements

- EU RoHS
- REACH SVHC
- Low-Halogen

Industry Documents

- IPC 1752A Class C
- IPC 1752A Class D
- Molex Product Compliance Declaration
- IEC-62474
- chemSHERPA (xml)

Substances of Interest

- PFAS

EU RoHS Certificate of Compliance

Additional Product Compliance Information

Part Details

General

Status	Active
Category	Backplane Connectors
Series	76165
Description	Impact 100 Ohm 3 Pair Vertical Backplane Header, Right Guide, Open Endwall, 10 Columns, 90 Circuits, Pin Length 5.50mm, Plated Through Hole Dimension 0.39mm, Lead-Free
Application	Conventional
Component Type	PCB Header
Product Name	Impact
UPC	883906225674

Agency

UL	E29179

Electrical

Current - Maximum per Contact	0.75A
Data Rate	25.0 Gbps
Impedance	100Ω
Shielded	No
Shield Type	N/A
Voltage - Maximum	30V AC (RMS)/DC

Physical

Circuits (Loaded)	90
Circuits (maximum)	90
Color - Resin	Black
Durability (mating cycles max)	200
First Mate / Last Break	No
Flammability	94V-0
Guide to Mating Part	Yes
Keying to Mating Part	No
Material - Metal	High Performance Alloy (HPA)
Material - Plating Mating	Gold
Material - Plating Termination	Tin
Material - Resin	High Temperature Thermoplastic
Net Weight	5.120/g
Number of Columns	10
Number of Pairs	3
Number of Rows	9
Orientation	Vertical
Packaging Type	Tray
PCB Locator	No
PCB Retention	No
PCB Thickness - Recommended	1.00mm
PC Tail Length	1.40mm
Pitch - Mating Interface	1.90mm
Pitch - Termination Interface	1.90mm
Plating min - Mating	0.762µm
Polarized to PCB	Yes

Stackable	No
Temperature Range - Operating	-55° to +85°C
Termination Interface Style	Through Hole - Compliant Pin

Mates With / Use With

Mates with Part(s)

Description	Part Number
Impact 100 Ohm 3 Pair Right-Angle Daughtercard Receptacles	76170

Application Tooling