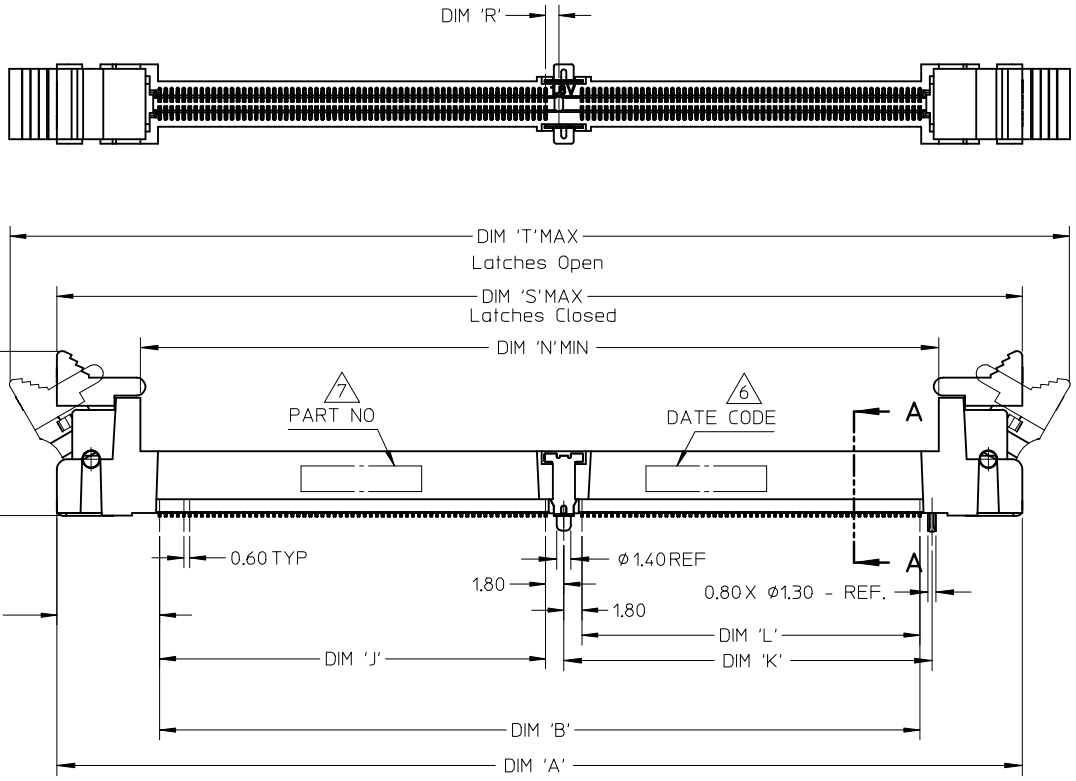

NOTES :
1. MATERIAL :
   HOUSING : LIQUID CRYSTAL POLYMER, GLASS FILLED, UL 94V-0, COLOUR : BLACK
   CONTACTS : COPPER ALLOY
   LATCHES : HIGH TEMPERATURE NYLON, UL 94V-0
   COLOUR : NATURAL (OFF-WHITE)

2. FINISH
   CONTACT AREA : 0.76 MICROMETER (30 MICROINCH) MIN GOLD OVER 1.25 MICROMETER (50 MICROINCH) MIN NICKEL
   SMT TAIL : 2.54 MICROMETER (100 MICROINCH) MIN TIN OVER 1.25 MICROMETER (50 MICROINCH) MIN NICKEL.
3. ACCEPTS 1.0 mm THICK MEMORY MODULE PER JEDEC MO-244 FOR 244 CKTS AND MO-258 FOR 200 CKTS.
4. PRODUCT SPECIFICATION : PS-87782-027
5. PRODUCT SHALL BE PACKED IN TRAY. PLS REFER TO SHEET 5
6. DATE CODE SHALL BE MARKED LEGIBLY AS SHOWN : YYDDD
7. PART NUMBER SHALL BE MARKED LEGIBLY AS SHOWN. 87782-XXXX (REFER TO TABLE)

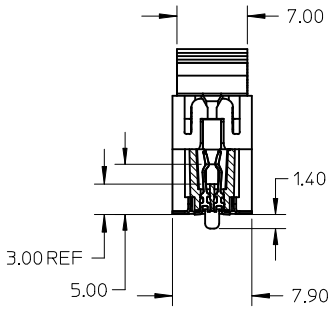

SECTION A-A

UPDATE DIMENSION
EC NO: S2013-0123
DRWN:EKSOH 2012/09/05
CH'KD:CGTAN 2012/09/12
APPR:SHLEN1 2012/09/18
DESCRIPTION
REV
G3

QUALITY SYMBOLS
▼=0
Ⓒ=0

GENERAL TOLERANCES (UNLESS SPECIFIED)

	mm	INCH
4 PLACES	± ---	± ---
3 PLACES	± ---	± ---
2 PLACES	± 0.13	± ---
1 PLACE	± 0.25	± ---
ANGULAR ± 1 °		

DRAFT WHERE APPLICABLE MUST REMAIN WITHIN DIMENSIONS

DIMENSION STYLE	MM ONLY
SCALE	NTS
DESIGN UNITS	METRIC
	THIRD ANGLE PROJECTION
DRAWN BY	MLONG
DATE	2003/01/07
CHECKED BY	PTLIM
DATE	2003/07/16
APPROVED BY	SKTOH
DATE	2003/07/17
MATERIAL NO.	SEE TABLE
TITLE	MINI DIMM, 0.60MM PITCH 200/244 CKTS, VERTICAL
	MOLEX INCORPORATED
DOCUMENT NO.	SD-87782-001
SHEET NO.	1 OF 5
SIZE	A3

THIS DRAWING CONTAINS INFORMATION THAT IS PROPRIETARY TO MOLEX INCORPORATED AND SHOULD NOT BE USED WITHOUT WRITTEN PERMISSION

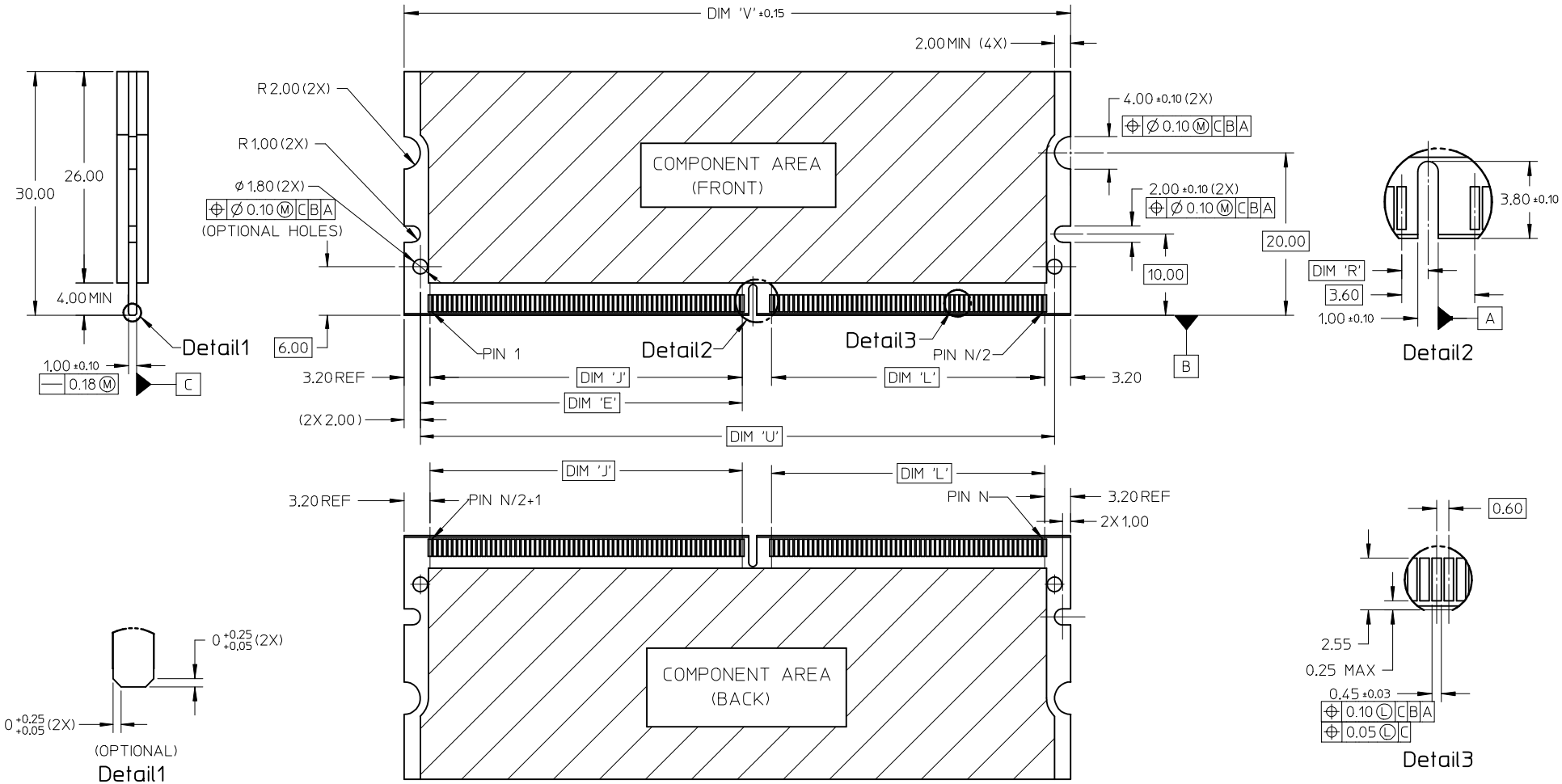

UPDATE DIMENSION
EC NO: S2013-0123
DRWN:EKSOH 2012/09/05
CHKD:LGTAN 2012/09/12
APPR:SHLEN1 2012/09/18
DESCRIPTION
REV
G3

QUALITY SYMBOLS
▼=0
Ⓒ▽=0

GENERAL TOLERANCES (UNLESS SPECIFIED)

	mm	INCH
4 PLACES	± ---	± ---
3 PLACES	± ---	± ---
2 PLACES	± 0.13	± ---
1 PLACE	± 0.25	± ---
ANGULAR ± 1 °		

DRAFT WHERE APPLICABLE MUST REMAIN WITHIN DIMENSIONS

DIMENSION STYLE: MM ONLY
SCALE: NTS
DESIGN UNITS: METRIC
THIRD ANGLE PROJECTION

		DATE
DRAWN BY	MLONG	2003/01/07
CHECKED BY	PTLIM	2003/07/16
APPROVED BY	SKTOH	2003/07/17

TITLE: MINI DIMM, 0.60MM PITCH 200/244 CKTS, VERTICAL

molex MOLEX INCORPORATED

MATERIAL NO.: SEE TABLE
DOCUMENT NO.: SD-87782-001
SHEET NO.: 2 OF 5
SIZE: A3

THIS DRAWING CONTAINS INFORMATION THAT IS PROPRIETARY TO MOLEX INCORPORATED AND SHOULD NOT BE USED WITHOUT WRITTEN PERMISSION

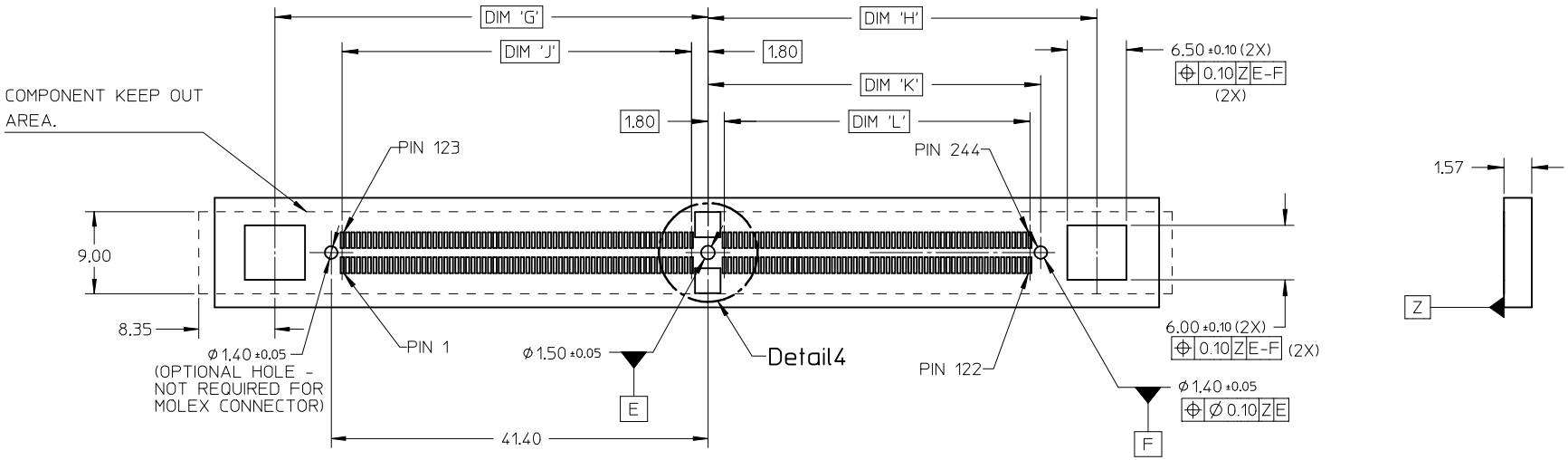

RECOMMENDED PCB LAYOUT

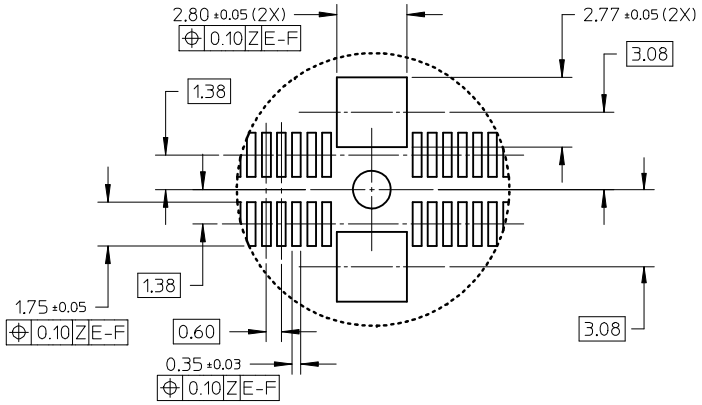

Detail4

UPDATE DIMENSION EC NO: S2013-0123 DRWN:EKSOH 2012/09/05 CH'KD:CGTAN 2012/09/12 APPR:SHLENI 2012/09/18 G3	REV	DESCRIPTION	QUALITY SYMBOLS ▼=0 C=0	GENERAL TOLERANCES (UNLESS SPECIFIED) mm / INCH 4 PLACES ± --- ± --- 3 PLACES ± --- ± --- 2 PLACES ± 0.13 ± --- 1 PLACE ± 0.25 ± --- ANGULAR ± 1 ° DRAFT WHERE APPLICABLE MUST REMAIN WITHIN DIMENSIONS	DIMENSION STYLE MM ONLY DRAWN BY MLONG DATE 2003/01/07 CHECKED BY PTLIM DATE 2003/07/16 APPROVED BY SKTOH DATE 2003/07/17 MATERIAL NO. SEE TABLE	SCALE NTS DESIGN UNITS METRIC THIRD ANGLE PROJECTION TITLE MINI DIMM, 0.60MM PITCH 200/244 CKTS, VERTICAL molex MOLEX INCORPORATED DOCUMENT NO. SD-87782-001	SHEET NO. 3 OF 5
					SIZE A3	THIS DRAWING CONTAINS INFORMATION THAT IS PROPRIETARY TO MOLEX INCORPORATED AND SHOULD NOT BE USED WITHOUT WRITTEN PERMISSION	

tb_frame_A3_P_AM_T
Rev. E 2006/04/15

FOR OPTIONS WITH COVER

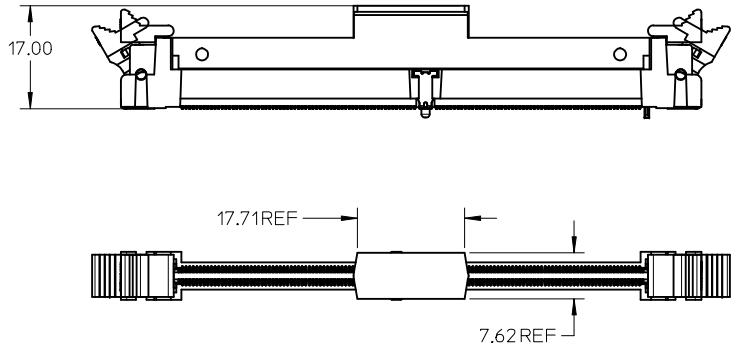

UPDATE DIMENSION
EC NO: S2013-0123
DRWN:EKSOH 2012/09/05
CH'KD:CGTAN 2012/09/12
APPR:SHLENI 2012/09/18
DESCRIPTION
REV
G3

QUALITY SYMBOLS
▼=0
Ⓒ=0

GENERAL TOLERANCES (UNLESS SPECIFIED)

	mm	INCH
4 PLACES	± ---	± ---
3 PLACES	± ---	± ---
2 PLACES	± 0.13	± ---
1 PLACE	± 0.25	± ---
ANGULAR ± 1 °		

DRAFT WHERE APPLICABLE MUST REMAIN WITHIN DIMENSIONS

DIMENSION STYLE: MM ONLY
SCALE: NTS
DESIGN UNITS: METRIC
THIRD ANGLE PROJECTION

DRAWN BY: MLONG DATE: 2003/01/07
CHECKED BY: PTLIM DATE: 2003/07/16
APPROVED BY: SKTOH DATE: 2003/07/17

TITLE: MINI DIMM, 0.60MM PITCH 200/244 CKTS, VERTICAL

MOLEX INCORPORATED

MATERIAL NO.: SEE TABLE
DOCUMENT NO.: SD-87782-001
SHEET NO.: 4 OF 5
SIZE: A3

THIS DRAWING CONTAINS INFORMATION THAT IS PROPRIETARY TO MOLEX INCORPORATED AND SHOULD NOT BE USED WITHOUT WRITTEN PERMISSION

CKT SIZE 'N'	PART NUMBER	MODULE CARD	VOLTAGE KEY	DIM 'R'	DIM 'J'	DIM 'K'	DIM 'L'	DIM 'N'	DIM 'A'	DIM 'S'	DIM 'T'	DIM 'E'	DIM 'U'	DIM 'V'	DIM 'G'	DIM 'H'	DIM 'B'	COVER	PACKAGING SPECIFICATION
244	87782-2001	DDR2	1.8 V	1.30	38.40	36.60	33.60	79.00	96.0	96.0	106.20	39.60	78.00	82.00	47.60	42.75	75.60	NIL	PK-87782-004
244	87782-2003	DDR2	1.8 V	1.30	38.40	36.60	33.60	79.00	96.0	96.0	106.20	39.60	78.00	82.00	47.60	42.75	75.60	YES	PK-87782-005
	87782-3003	DDR3	1.5 V	2.30															
244	87782-2005	DDR2	1.8 V	1.30	38.40	36.60	33.60	79.00	96.0	96.0	106.20	39.60	78.00	82.00	47.60	42.75	75.60	YES	PK-87782-004
	87782-3005	DDR3	1.5 V	2.30															
244	87782-2007	DDR2	1.8 V	1.30	38.40	36.60	33.60	79.00	96.0	96.0	106.20	39.60	78.00	82.00	47.60	42.75	75.60	YES	PK-87782-006
	87782-3007	DDR3	1.5 V	2.30															
244	87782-2009	DDR2	1.8 V	1.30	38.40	36.60	33.60	79.00	96.0	96.0	106.20	39.60	78.00	82.00	47.60	42.75	75.60	YES	PK-87782-002
	87782-3009	DDR3	1.5 V	2.30															
200	87782-2201	DDR2	1.8 V	1.30	23.40	38.40	35.40	65.80	82.8	82.8	93.00	24.60	64.80	68.80	32.60	44.55	62.40	NIL	PK-87782-003
	87782-2202	DDR	2.5 V	2.30															
200	87782-2203	DDR2	1.8 V	1.30	23.40	38.40	35.40	65.80	82.8	82.8	93.00	24.60	64.80	68.80	32.60	44.55	62.40	YES	PK-87782-003
	87782-2204	DDR	2.5 V	2.30															
244	87782-6001	DDR2	1.8 V	1.30	38.40	36.60	33.60	79.00	96.0	96.0	106.20	39.60	78.00	82.00	47.60	42.75	75.60	YES	PK-87782-001
	87782-6003	DDR3	1.5 V	2.30															

UPDATE DIMENSION
EC NO: S2013-0123
DRWN:EKSOH 2012/09/05
CH'KD:LGTAN 2012/09/12
APPR:SHLENI 2012/09/18
DESCRIPTION
G3
REV

QUALITY SYMBOLS
▼=0
Ⓒ=0

GENERAL TOLERANCES (UNLESS SPECIFIED)

	mm	INCH
4 PLACES	± ---	± ---
3 PLACES	± ---	± ---
2 PLACES	± 0.13	± ---
1 PLACE	± 0.25	± ---
ANGULAR ± 1 °		

DRAFT WHERE APPLICABLE MUST REMAIN WITHIN DIMENSIONS

DIMENSION STYLE: MM ONLY
SCALE: NTS
DESIGN UNITS: METRIC
THIRD ANGLE PROJECTION

DRAWN BY: MLONG DATE: 2003/01/07
CHECKED BY: PTLIM DATE: 2003/07/16
APPROVED BY: SKTOH DATE: 2003/07/17
MATERIAL NO.: SEE TABLE

TITLE: MINI DIMM, 0.60MM PITCH 200/244 CKTS, VERTICAL

molex MOLEX INCORPORATED

DOCUMENT NO.: SD-87782-001
SHEET NO.: 5 OF 5
SIZE: A3

THIS DRAWING CONTAINS INFORMATION THAT IS PROPRIETARY TO MOLEX INCORPORATED AND SHOULD NOT BE USED WITHOUT WRITTEN PERMISSION