

SECTION A-A
SCALE 1:1

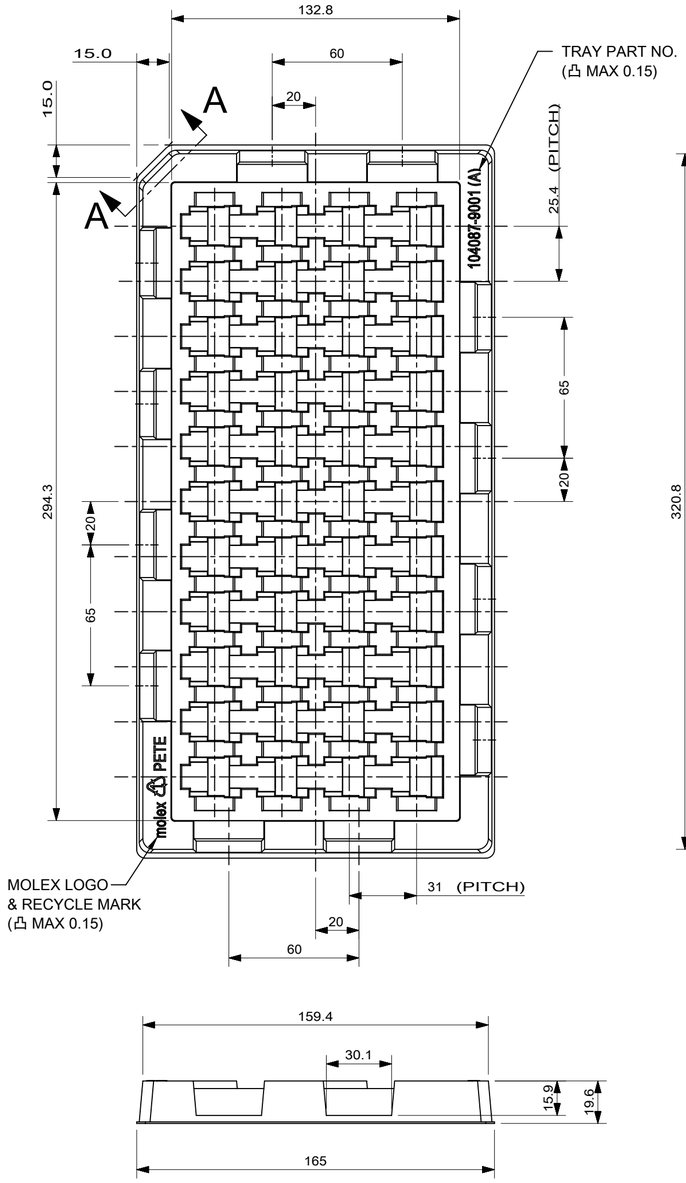

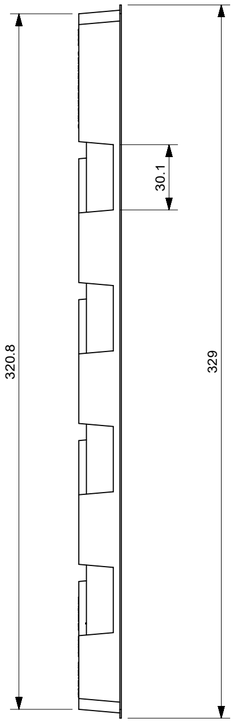

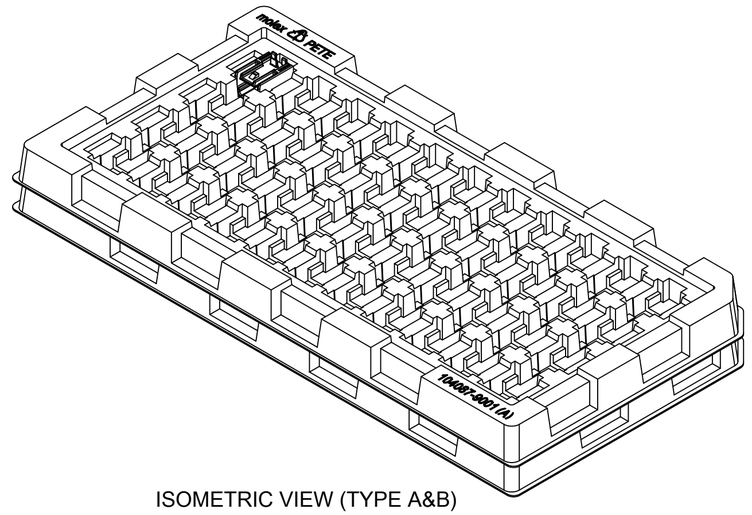

ISOMETRIC VIEW (TYPE A&B)
SCALE 1:2

TRAY TYPE (B)

(BOUNDARY SHAPE IS SYMMETRIC FROM TYPE (A)

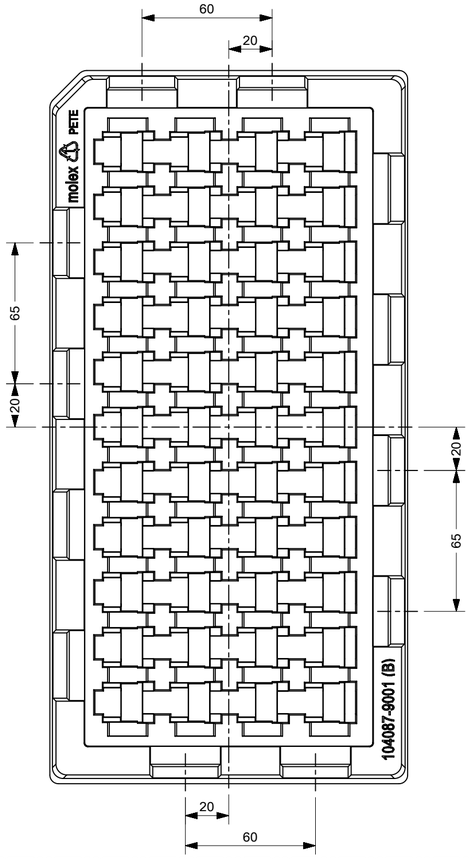

SYMBOLS	
FA	= 0
FC	= 0
FP	= 0
S	= 0
▼	= 0
C	= 0
☒	= 0
■	= 0
V	= 0

THIS DRAWING CONTAINS INFORMATION THAT IS PROPRIETARY TO MOLEX ELECTRONIC TECHNOLOGIES, LLC AND SHOULD NOT BE USED WITHOUT WRITTEN PERMISSION

DIMENSION UNITS	SCALE
mm	1:2

GENERAL TOLERANCES (UNLESS SPECIFIED)

ANGULAR TOL	±	1.0 °
4 PLACES	±	
3 PLACES	±	
2 PLACES	±	0.3
1 PLACE	±	0.5
0 PLACES	±	

DRAFT WHERE APPLICABLE MUST REMAIN WITHIN DIMENSIONS

CURRENT REV DESC:

EC NO:	609398	
DRWN:	SPARK04	2018/12/20
CHK'D:	JHJANG	2019/01/08
APPR:	JHJANG	2019/01/08

INITIAL REVISION:

DRWN:	BCYOON	2011/02/01
APPR:	YUNSIKKIM	2011/02/14

THIRD ANGLE PROJECTION

DRAWING	SERIES
A2-SIZE	104087

molex

HSAUTOLINK R/A HEADER
TRAY FOR HMI MODULE

PRODUCT CUSTOMER DRAWING

DOCUMENT NUMBER	DOC TYPE	DOC PART	REVISION
SD-104087-001	PSD	001	A2

MATERIAL NUMBER	CUSTOMER	SHEET NUMBER
1040879001	GENERAL MARKET	1 OF 1

DOCUMENT STATUS	P1	RELEASE DATE	2019/01/08 03:29:41

FORMAT: master-tb-prod-A2
REVISION: H
DATE: 2018/01/18

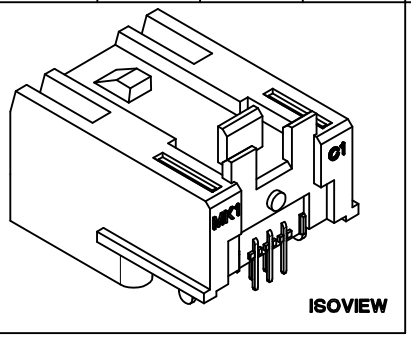

ISOVIEW

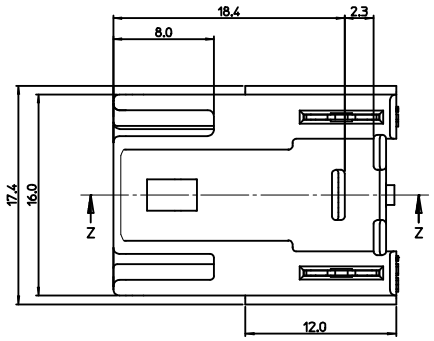

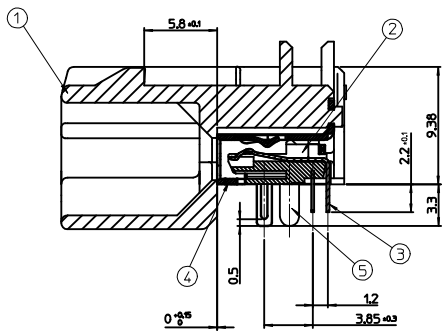

SECTION Z-Z

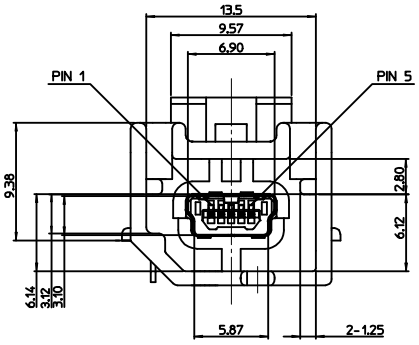

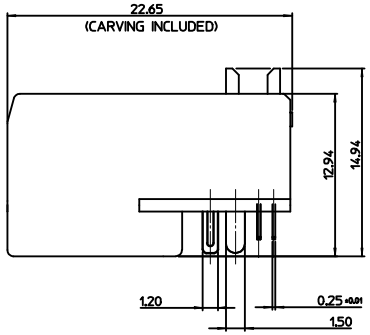

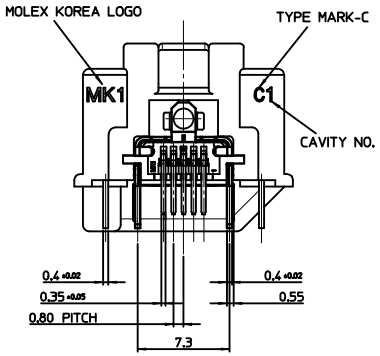

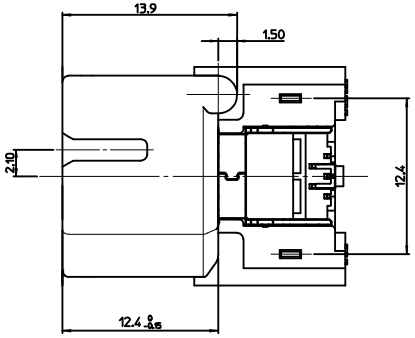

NOTES
1. MATES WITH :
   (MOLEX SERIES NO. : 111014, 111015, 111005, 111041, 111019, 111020)
2. SHROUD GEOMETRY AND ASSEMBLY WITH USB MINI-B CONNECTOR ARE ACCORDING TO USCAR STD 999-U-USB-Z01
3. FINISHES
   - TERMINAL :
     CONTACT AREA : GOLD 0.75㎛ MIN.
     SOLDER TAIL AREA : TIN 3.8㎛ MIN.
     UNDER PLATING : NI 1.25㎛ MIN.
   - SHIELD CASE :
     3.0㎛ MIN. TIN OVER NI 1.0㎛ MIN.
   - FITTING NAIL :
     3.0㎛ MIN. TIN OVER NI 1.0㎛ MIN.
4. UNLESS OTHERWISE SPECIFIED, TYPICAL RECOMMENDED PCB MANUFACTURING TOLERANCE IS ±0.05
5. PCB THICKNESS : 1.6mm(REFERENCE)
A1 6. APPLY TO WITHOUT SIDEWING TYPE

<PART LIST>

NO.	PART NAME	MATERIALS
①	SHROUD	SPS, GLASS FILLED, UL94 HB
②	REC. HOUSING	LCP, GLASS FILLED, UL94 V-0
③	TERMINAL	COPPER ALLOY
④	SHIELD CASE	PHOSPHOR BRONZE
⑤	FITTING NAIL	BRASS

<TABLE 1>

MATERIAL NO.	ORDER NO.	PACKAGING	COLOR
1040870117	104087-0117	TRAY	BROWN
1040870317	104087-0317	REEL & TAPE	BROWN

A1

TOP VIEW: COMPONENT SIDE

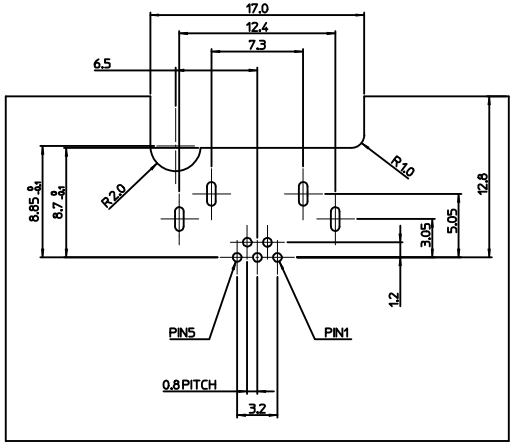

BOTTOM VIEW: SOLDER SIDE

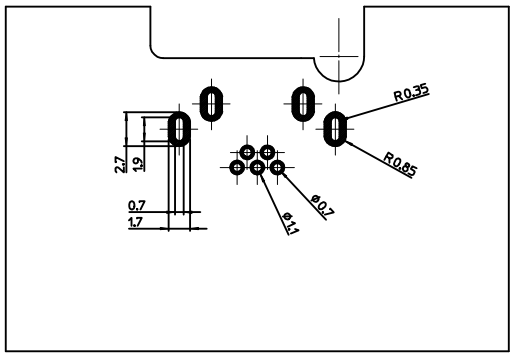

RECOMMENDED PCB LAYOUT

NEW RELEASE
EC NO: KTR2015-0001 2014/08/12
DRWN:YIBAEK
CHKD:
APPR:JYCHOI 2014/08/21
DESCRIPTION
REV
A1

QUALITY SYMBOLS
▼=0
C=0

GENERAL TOLERANCES (UNLESS SPECIFIED)

	mm	INCH
4 PLACES	± ---	± ---
3 PLACES	± ---	± ---
2 PLACES	± 0.15	± ---
1 PLACE	± 0.25	± ---
ANGULAR ± 1 °		

DRAFT WHERE APPLICABLE MUST REMAIN WITHIN DIMENSIONS

DIMENSION STYLE: MM ONLY
SCALE:
DESIGN UNITS: METRIC
THIRD ANGLE PROJECTION

	DRAWN BY	DATE
	YIBAEK	2014/05/07
	CHECKED BY	DATE
	BCYOON	2014/05/07
	APPROVED BY	DATE
	JYCHOI	2014/05/07

TITLE: HSAUTOLINK R/A HEADER TYPE-C FOR HMI MODULE (SOLDER TAIL=2.2MM)

MOLEX INCORPORATED

MATERIAL NO.: SEE TABLE 1
DOCUMENT NO.: SD-104087-014
SHEET NO.: 1 OF 1
SIZE: A1

THIS DRAWING CONTAINS INFORMATION THAT IS PROPRIETARY TO MOLEX INCORPORATED AND SHOULD NOT BE USED WITHOUT WRITTEN PERMISSION