CIRCUIT	PART NO.	DIM A	DIM B	COLOR
2	105411-1102	8.35	12.45	BLACK
4	105411-1104	12.05	16.15	
6	105411-1106	17.75	21.85	
8	105411-1108	23.45	27.55	
10	105411-1110	29.15	33.25	
12	105411-1112	34.85	38.95	

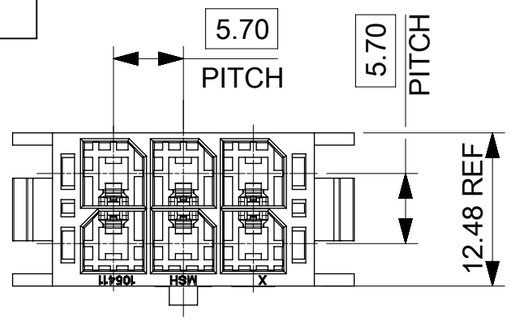

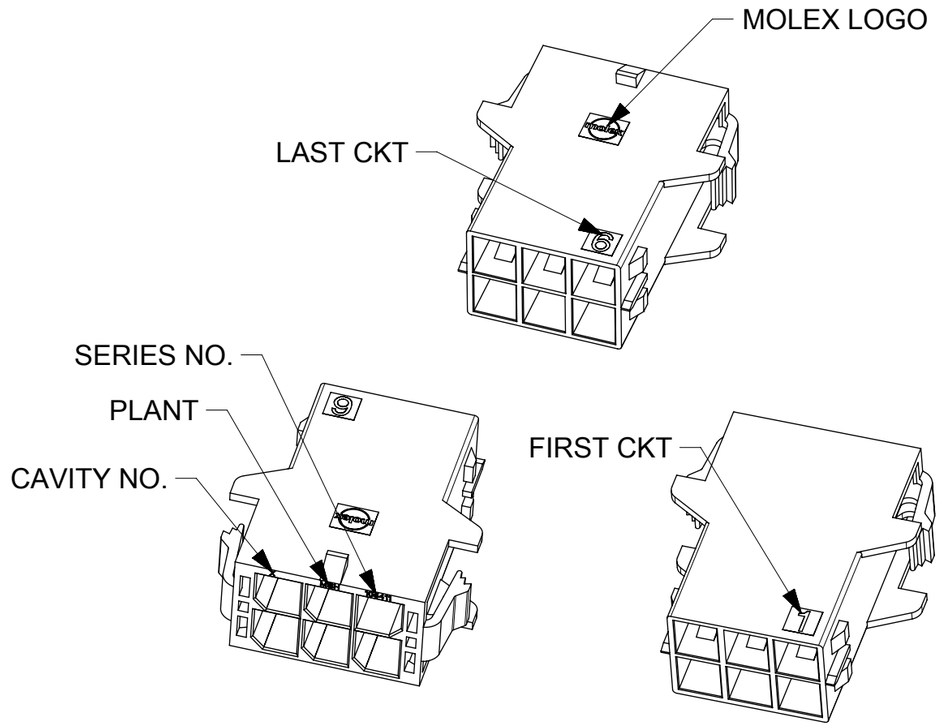

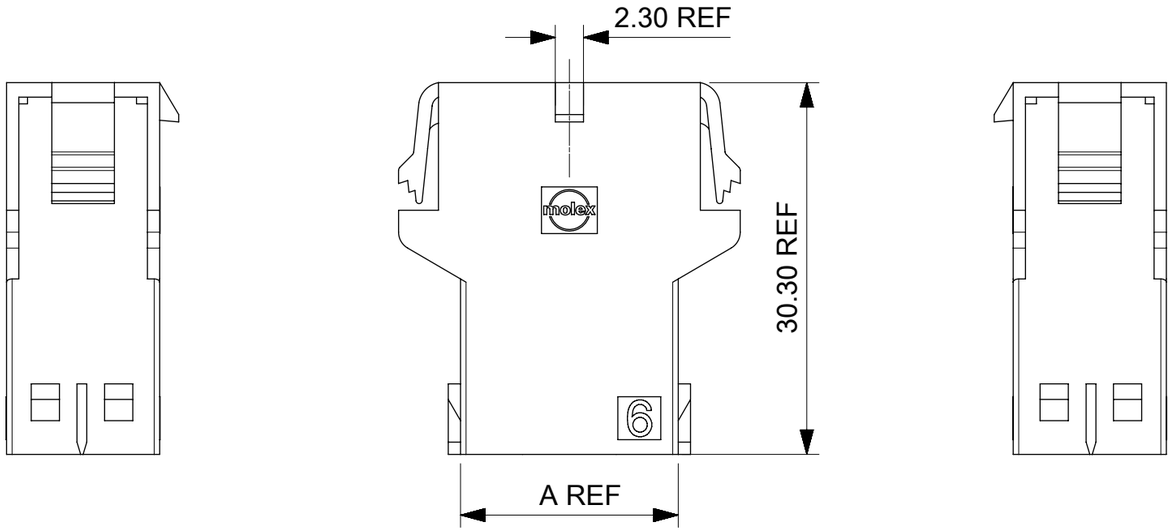

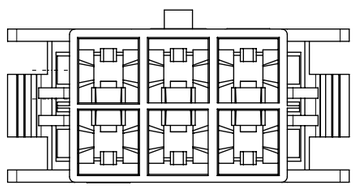

NOTES:
1. MATERIAL: NYLON,UL 94V-0 AND GLOW WIRE CAPABLE PER IEC60335-1. COLOR BLACK.
2. PART USED WITH MOLEX SERIES.
   RECEPTACLE HOUSING: 171692
   TPA: 105415
   MALE TERMINAL: 105417/105418.
3. PRODUCT SPECIFICATION:1054171000-PS
4. PACKAGING SPECIFICATION: 1054110200
5. APPLICATION SPECIFICATION:768232000-AS

SYMBOLS	
R = 0	
C = 0	
E = 0	
S = 0	
▼ = 0	
C = 0	
☒ = 0	
■ = 0	
= 0	

THIS DRAWING CONTAINS INFORMATION THAT IS PROPRIETARY TO MOLEX ELECTRONIC TECHNOLOGIES, LLC AND SHOULD NOT BE USED WITHOUT WRITTEN PERMISSION

DIMENSION UNITS	SCALE
mm	
GENERAL TOLERANCES (UNLESS SPECIFIED)	
ANGULAR TOL ± 0.5 °	
4 PLACES	±
3 PLACES	±
2 PLACES	± 0.25
1 PLACE	± 0.35
0 PLACES	±
DRAFT WHERE APPLICABLE MUST REMAIN WITHIN DIMENSIONS	

CURRENT REV DESC:

EC NO: 628261
DRWN: ALUO02 2019/11/28
CHK'D: AYIN 2019/12/11
APPR: AYIN 2019/12/11

INITIAL REVISION:
DRWN: YXZHENG 2016/12/15
APPR: YXZHENG 2018/08/06

molex

MEGA-FIT PANEL MOUNT DR PLUG

PRODUCT CUSTOMER DRAWING

DOCUMENT NUMBER	DOC TYPE	DOC PART	REVISION
1054110200	PSD	000	D1

THIRD ANGLE PROJECTION	DRAWING	SERIES	MATERIAL NUMBER	CUSTOMER	SHEET NUMBER
	A3-SIZE	105411	SEE CHART	GENERAL MARKET	1 OF 2

DOCUMENT STATUS	P1	RELEASE DATE	2019/12/11 04:25:08

FORMAT: master-tb-prod-A3
REVISION: H
DATE: 2018/01/18

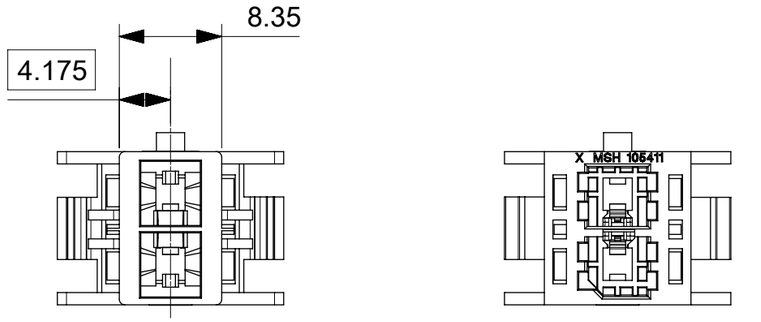

2 CIRCUITS

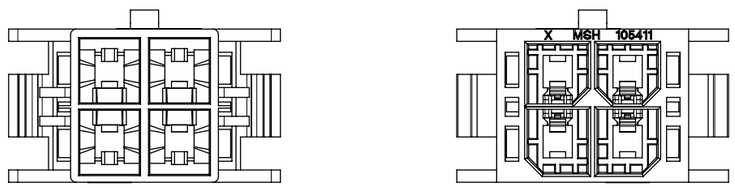

4 CIRCUITS

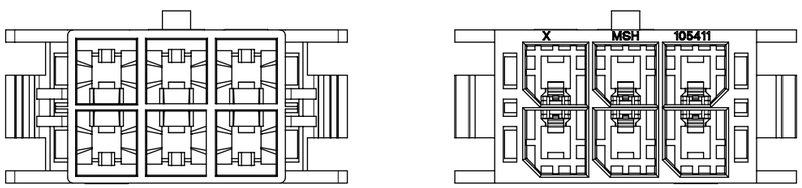

6 CIRCUITS

8 CIRCUITS

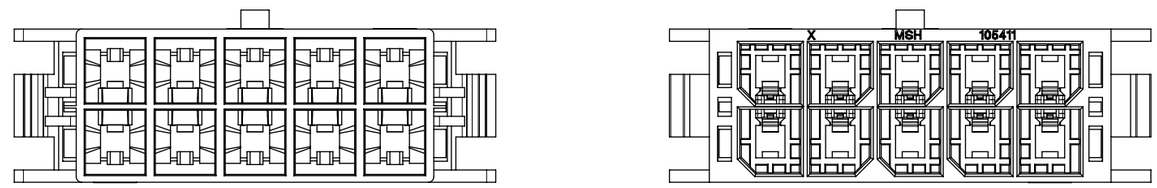

10 CIRCUITS

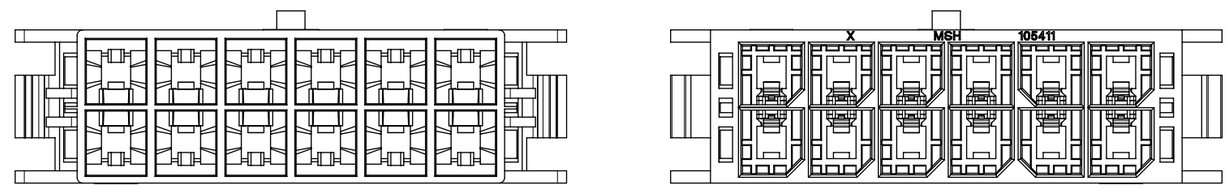

12 CIRCUITS

POLARIZATION LAYOUT

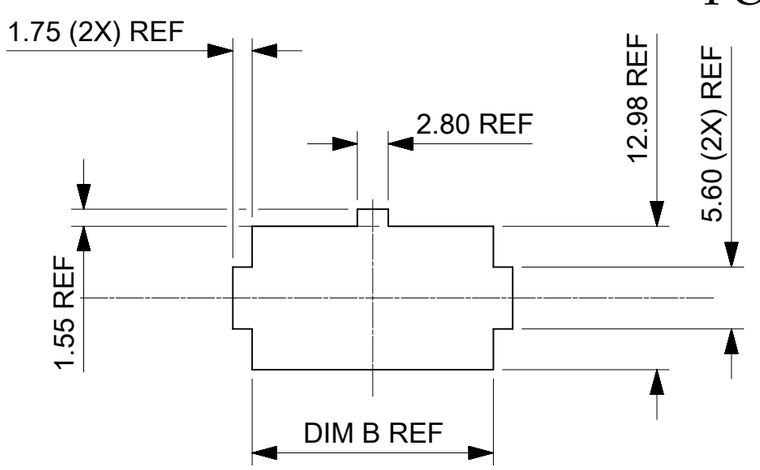

RECOMMEND PANEL APERTURE SIZE
PANEL THICKNESS 1.2MM-2.0MM

DOCUMENT STATUS	P1	RELEASE DATE	2019/12/11 04:25:08

FORMAT: master-tb-prod-A3
REVISION: H
DATE: 2018/01/18

SYMBOLS	
E/A	= 0
E/C	= 0
E/E	= 0
S	= 0
▼	= 0
C	= 0
☒	= 0
■	= 0
▽	= 0

THIS DRAWING CONTAINS INFORMATION THAT IS PROPRIETARY TO MOLEX ELECTRONIC TECHNOLOGIES, LLC AND SHOULD NOT BE USED WITHOUT WRITTEN PERMISSION

DIMENSION UNITS	SCALE
mm	

GENERAL TOLERANCES (UNLESS SPECIFIED)

ANGULAR TOL	±	0.5 °
4 PLACES	±	
3 PLACES	±	
2 PLACES	±	0.25
1 PLACE	±	0.35
0 PLACES	±	

DRAFT WHERE APPLICABLE MUST REMAIN WITHIN DIMENSIONS

CURRENT REV DESC:

EC NO: 628261
DRWN: ALUO02 2019/11/28
CHK'D: AYIN 2019/12/11
APPR: AYIN 2019/12/11

INITIAL REVISION:
DRWN: YXZHENG 2016/12/15
APPR: YXZHENG 2018/08/06

THIRD ANGLE PROJECTION | DRAWING: A3-SIZE | SERIES: 105411

molex

MEGA-FIT PANEL MOUNT DR PLUG

PRODUCT CUSTOMER DRAWING

DOCUMENT NUMBER	DOC TYPE	DOC PART	REVISION
1054110200	PSD	000	D1

MATERIAL NUMBER	CUSTOMER	SHEET NUMBER
SEE CHART	GENERAL MARKET	2 OF 2