WIRE GAUGE		PART NO.	PLATING OPTION	LUBED	DIM "A"
NORMAL CRIMP	DOUBLE CRIMP				
10AWG	N/A	105417-0332	HOT DIP TIN PREPLATE-OVERALL 1.0µm(40µ") MIN	YES	14.00
12AWG	2x16AWG	105417-0333			13.00
14/16AWG	2x18AWG OR 2x20AWG	105417-0334			
10AWG	N/A	105418-0312	15u" GOLD 0.38µm(15µ") GOLD CONTACT AREA, 1.5µm(60µ")-2.5µm(100µ") MATTE TIN, OVER 1.25µm(50µ")-2.5µm(100µ") NICKEL OVERALL	YES	14.00
12AWG	2x16AWG	105418-0313			13.00
14/16AWG	2x18AWG OR 2x20AWG	105418-0314			
10AWG	N/A	105418-1312	30u" GOLD 0.76µm(30µ") GOLD CONTACT AREA, 1.5µm(60µ")-2.5µm(100µ") MATTE TIN, OVER 1.25µm(50µ")-2.5µm(100µ") NICKEL OVERALL	YES	14.00
12AWG	2x16AWG	105418-1313			13.00
14/16AWG	2x18AWG OR 2x20AWG	105418-1314			

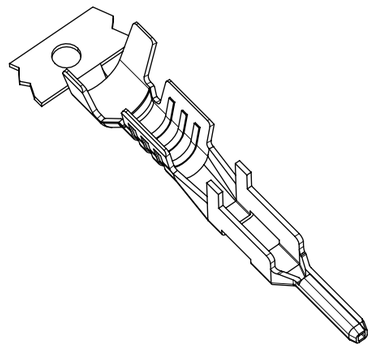

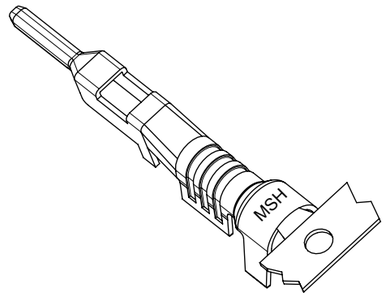

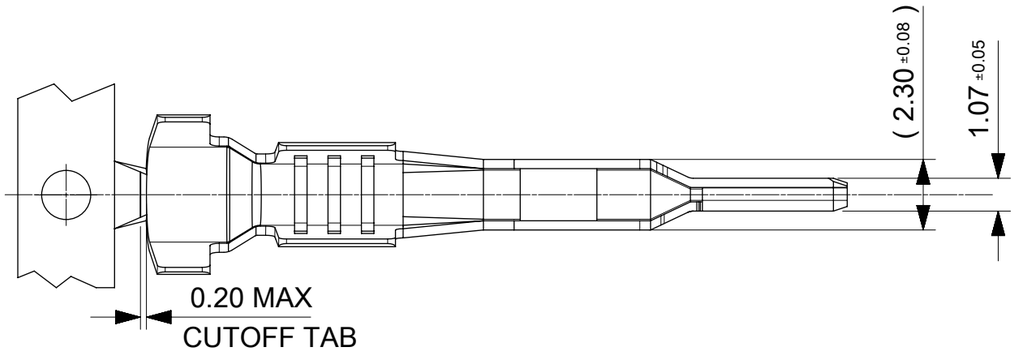

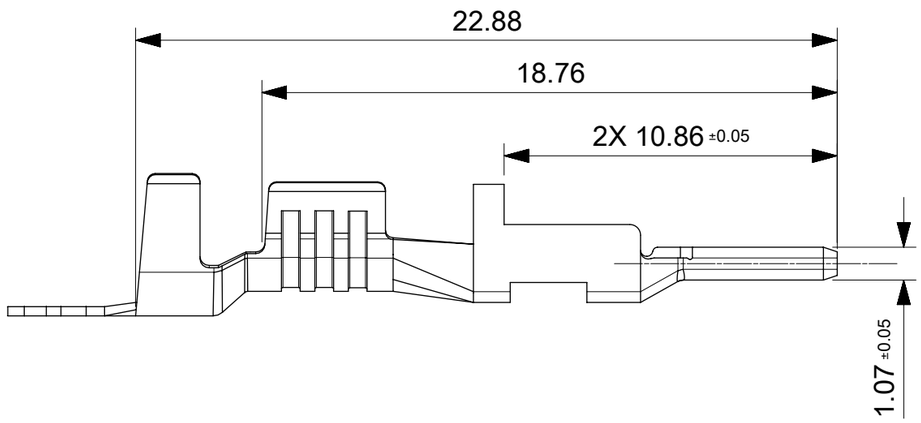

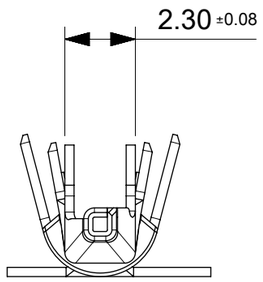

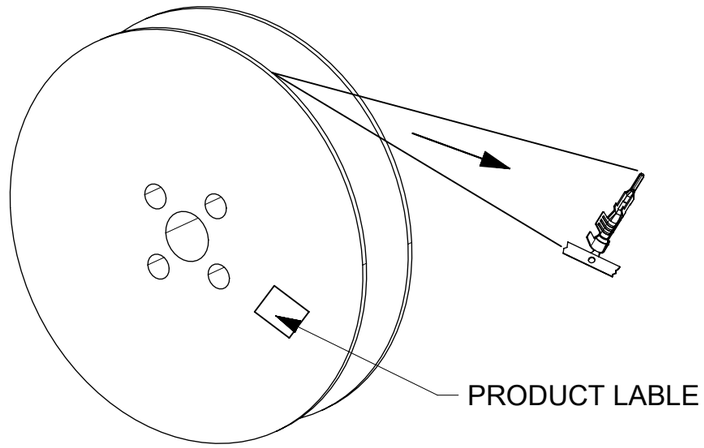

FINISH PART UNWIND DIRECTION

NOTES:

1. MATERIAL: HIGH CONDUCTIVITY COPPER ALLOY.
2. FINISH: SEE CHART.
3. PRODUCT SPECIFICATION: 1054171000-PS.
4. PACKAGING SPECIFICATION: REEL PER 1054170100.
5. TERMINAL USED WITH MOLEX SERIES
   PLUG HOUSING:105411, 213814 AND 213815
   FEMALE TERMINALS 76823/172063
6. APPLICATION SPECIFICATION: 768232000-AS

THIS DRAWING CONTAINS INFORMATION THAT IS PROPRIETARY TO MOLEX ELECTRONIC TECHNOLOGIES, LLC AND SHOULD NOT BE USED WITHOUT WRITTEN PERMISSION

DIMENSION UNITS	SCALE
mm	NTS

GENERAL TOLERANCES (UNLESS SPECIFIED)

ANGULAR TOL	±	3.0 °
4 PLACES	±	
3 PLACES	±	
2 PLACES	±	0.25
1 PLACE	±	0.35
0 PLACES	±	

DRAFT WHERE APPLICABLE MUST REMAIN WITHIN DIMENSIONS

CURRENT REV DESC:

EC NO: 722781
DRWN: WYATTH5 2022/10/20
CHK'D: XQZHANG 2022/10/27
APPR: XQZHANG 2022/10/27

INITIAL REVISION:
DRWN: YXZHENG 2016/12/15
APPR: YXZHENG 2018/08/06

THIRD ANGLE PROJECTION | DRAWING: A3-SIZE | SERIES: 105417

molex

MEGA-FIT MALE TML FOR 14/16AWG, 12AWG, AND 10AWG WIRE

PRODUCT CUSTOMER DRAWING

DOCUMENT NUMBER	DOC TYPE	DOC PART	REVISION
1054170100	PSD	000	C3

MATERIAL NUMBER	CUSTOMER	SHEET NUMBER
SEE TABLE	GENERAL MARKET	1 OF 3

DOCUMENT STATUS	P1	RELEASE DATE	2022/10/27 06:33:12

FORMAT: master-tb-prod-A3
REVISION: J1
DATE: 2021/05/01

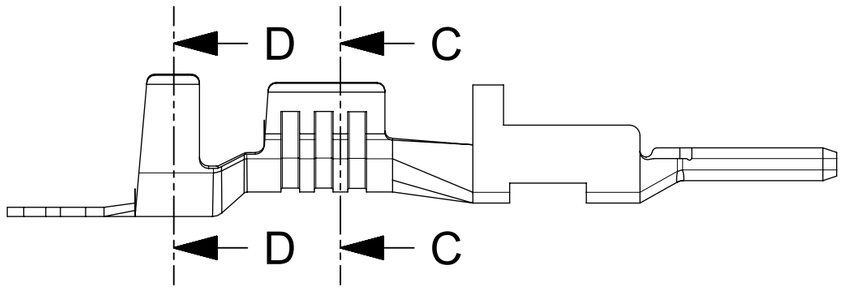

14/16 AWG WIRE STYLES

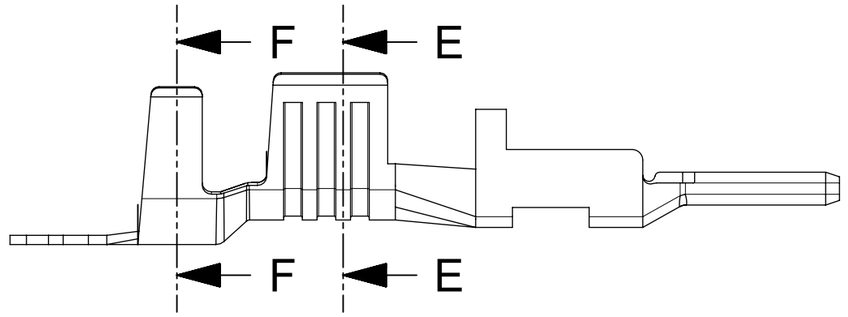

12 AWG WIRE STYLES

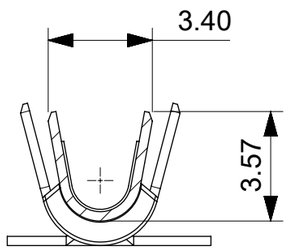

SECTION C-C

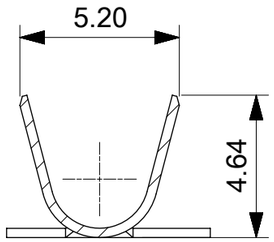

SECTION D-D

CONDUCTOR AND INSULATION 14/16 AWG WIRE STYLES

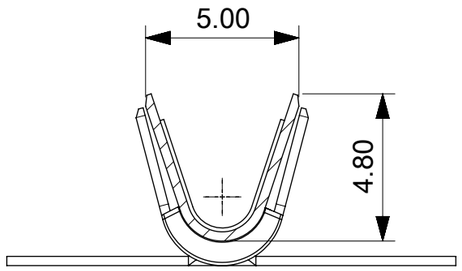

SECTION E-E

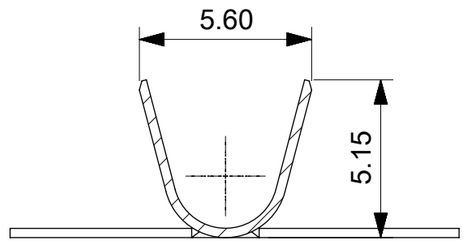

SECTION F-F

CONDUCTOR AND INSULATION 12 AWG WIRE STYLES

THIS DRAWING CONTAINS INFORMATION THAT IS PROPRIETARY TO MOLEX ELECTRONIC TECHNOLOGIES, LLC AND SHOULD NOT BE USED WITHOUT WRITTEN PERMISSION

DIMENSION UNITS	SCALE
mm	NTS

GENERAL TOLERANCES (UNLESS SPECIFIED)

ANGULAR TOL	±	3.0 °
4 PLACES	±	
3 PLACES	±	
2 PLACES	±	0.25
1 PLACE	±	0.35
0 PLACES	±	

DRAFT WHERE APPLICABLE MUST REMAIN WITHIN DIMENSIONS

CURRENT REV DESC:

EC NO: 722781

DRWN:	WYATTH5	2022/10/20
CHK'D:	XQZHANG	2022/10/27
APPR:	XQZHANG	2022/10/27

INITIAL REVISION:

DRWN:	YXZHENG	2016/12/15
APPR:	YXZHENG	2018/08/06

molex

MEGA-FIT MALE TML FOR 14/16AWG, 12AWG, AND 10AWG WIRE

PRODUCT CUSTOMER DRAWING

DOCUMENT NUMBER	DOC TYPE	DOC PART	REVISION
1054170100	PSD	000	C3

THIRD ANGLE PROJECTION	DRAWING	SERIES	MATERIAL NUMBER	CUSTOMER	SHEET NUMBER
	A3-SIZE	105417	SEE TABLE	GENERAL MARKET	2 OF 3

DOCUMENT STATUS	P1	RELEASE DATE	2022/10/27 06:33:12

FORMAT: master-tb-prod-A3
REVISION: J1
DATE: 2021/05/01

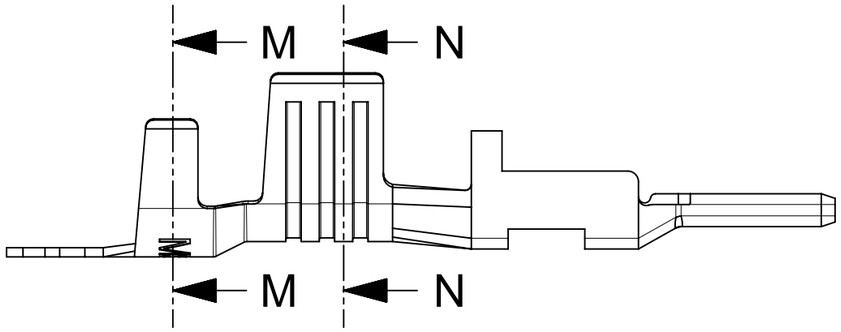

10 AWG WIRE STYLES

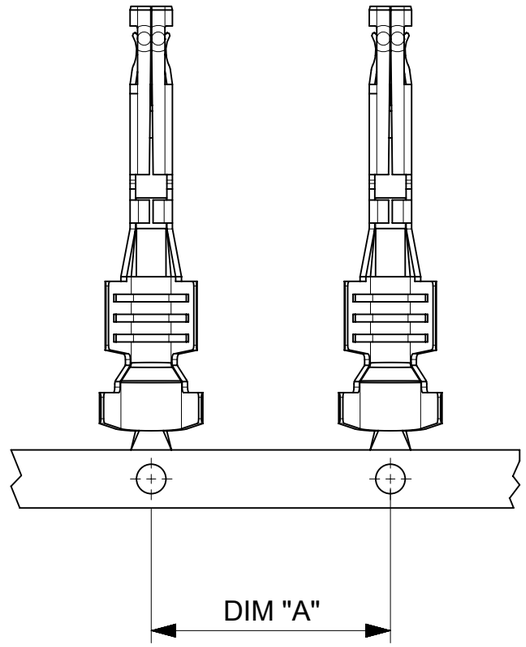

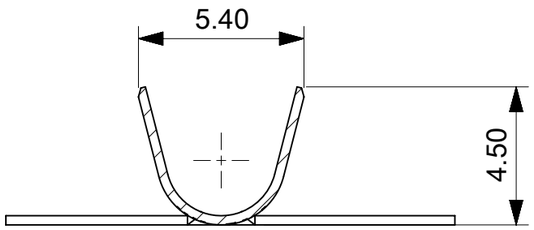

SECTION M-M

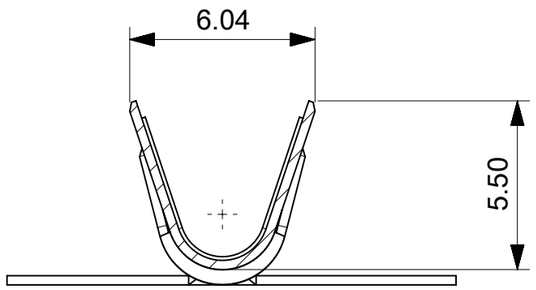

SECTION N-N

CONDUCTOR AND INSULATION 10 AWG WIRE STYLES

THIS DRAWING CONTAINS INFORMATION THAT IS PROPRIETARY TO MOLEX ELECTRONIC TECHNOLOGIES, LLC AND SHOULD NOT BE USED WITHOUT WRITTEN PERMISSION

DIMENSION UNITS	SCALE
mm	NTS

GENERAL TOLERANCES (UNLESS SPECIFIED)

ANGULAR TOL	± 3.0 °
4 PLACES	±
3 PLACES	±
2 PLACES	± 0.25
1 PLACE	± 0.35
0 PLACES	±

DRAFT WHERE APPLICABLE MUST REMAIN WITHIN DIMENSIONS

CURRENT REV DESC:

EC NO: 722781

DRWN:	WYATTH5	2022/10/20
CHK'D:	XQZHANG	2022/10/27
APPR:	XQZHANG	2022/10/27

INITIAL REVISION:

DRWN:	YXZHENG	2016/12/15
APPR:	YXZHENG	2018/08/06

molex

MEGA-FIT MALE TML FOR 14/16AWG, 12AWG, AND 10AWG WIRE

PRODUCT CUSTOMER DRAWING

DOCUMENT NUMBER	DOC TYPE	DOC PART	REVISION
1054170100	PSD	000	C3

THIRD ANGLE PROJECTION	DRAWING	SERIES	MATERIAL NUMBER	CUSTOMER	SHEET NUMBER
	A3-SIZE	105417	SEE TABLE	GENERAL MARKET	3 OF 3

DOCUMENT STATUS	P1	RELEASE DATE	2022/10/27 06:33:12

FORMAT: master-tb-prod-A3
REVISION: J1
DATE: 2021/05/01