10/100 BASE-T SINGLE PORT TRANSFORMER MODULES

With 1:1 Transmit Turns Ratios

Pulse
A TECHNITROL COMPANY

RoHS COMPLIANT

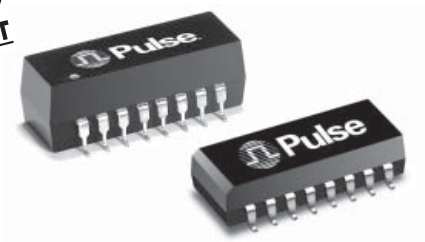

- RoHS peak reflow temperature rating: 245°C
- Compatible with Broadcom, Intel, Micrel, National Semiconductor, ICS, and TDK Transceivers
- Meets IEEE 802.3 specification

Electrical Specifications @ 25°C — Operating Temperature 0°C to 70°C

RoHS Compliant Part Number	Insertion Loss (dB MAX)	Return Loss (dB MIN @ 100 Ω)				Differential to Common Mode Rejection (dB MIN)			Crosstalk (dB TYP)			Hipot (Vrms MIN)
	0.1-100 MHz	1-30 MHz	40 MHz	50 MHz	60-80 MHz	30 MHz	60 MHz	100 MHz	30 MHz	60 MHz	100 MHz	
H1012NL[4d]	-1.0	-20	-20	-18	-14	-42	-36	-33	-50	-40	-40	1500
H1019NL[4c]	-1.0	-20	-18	-18	-14	-45	-40	-35	-45	-40	-35	1500
H1042NL[4c]	-1.0	-16	-13.5	-11.5	-10	-45	-40	-35	-40	-38	-35	1500
H1086NL[4c]	-1.0	-22	-20	-18	-12	-45	-40	-35	-50	-40	-40	1500
H1089NL[4c]	-1.0	-22	-20	-18	-12	-42	-38	-32	-50	-40	-40	1500
H1138NL[4a]	-0.8	-18	-16	-14	-12	42	-37	-33	-50	-40	-40	1500
HX1148NL[2, 4d]	-1.5	-18	-13.5	-11.5	-10	-42	-37	-33	-50	-40	-40	1500
HX1178NL[2, 4d]	-1.5	-18	-13.5	-11.5	-10	-42	-37	-33	-50	-40	-40	1500
PE-68515LNL[4d]	-1.0	-18	-18	-16	-12	-50	-45	-40	-55	-50	-50	1500
PE-68517LNL[4d]	-1.0	-18	-16	-15	-12	-45	-40	-35	-50	-40	-40	1500
H1338NL[4a]	-1.1	-18	-16	-14	-12	-42	-37	-35	-40	-40	-35	1500

1. **Rise** time optimized for National's DP83843.
2. **Operating** temperature: -40°+ 85°C.
3. **When** ordering Tape & Reel packaging, add a **"T"** suffix to the end of the part number, e.g. H1012NL**T**
4. **MSL** = Moisture Sensitivity Level: a = 1, b = 2, c = 3, d = 4.

Mechanical

PE-68515LNL, PE-68517LNL, H1042NL

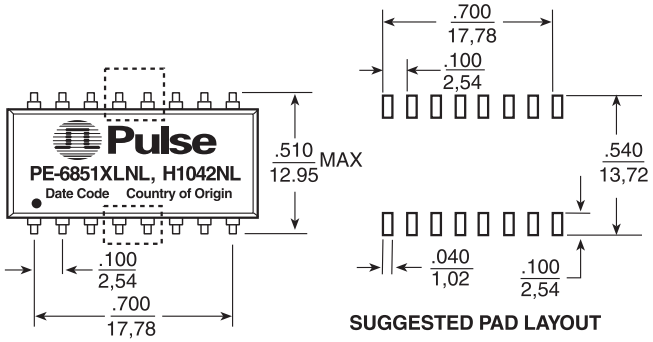

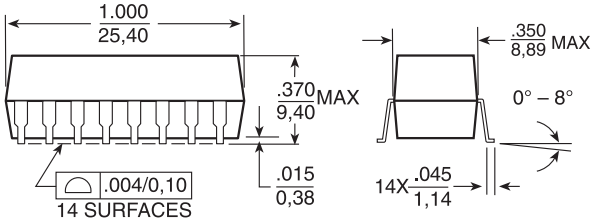

NOTE: The PE-68515L pins 4 and 13 are removed.
The PE-68517L pins 5 and 12 are removed.

Weight . . . . . 3.5 grams
Tube 20/tube
Tape & Reel 160/reel

10/100 BASE-T SINGLE PORT TRANSFORMER MODULES
With 1:1 Transmit Turns Ratios

Mechanicals *(continued)*

H1012NL, H1019NL, H1086NL, H1089NL, H1138NL

HX1148NL, HX1178NL

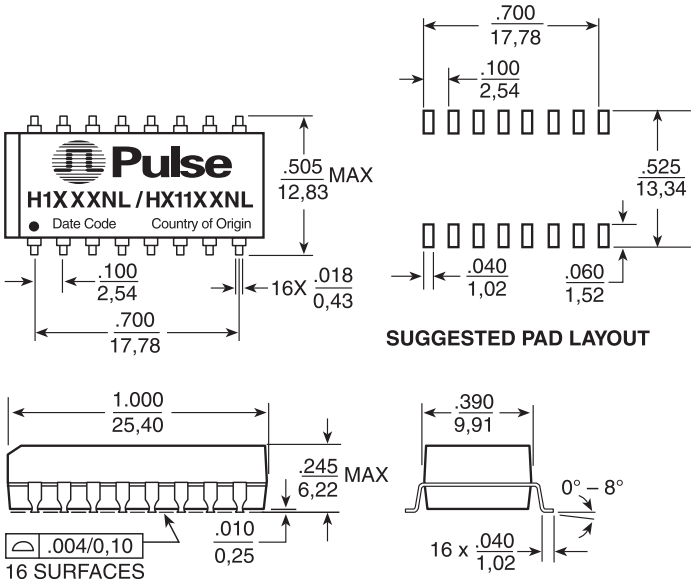

Dimensions: Inches / mm Unless otherwise specified, all tolerances are ± .010 / 0,25

Weight . . . . . 3.0 grams
Tube 20/tube
Tape & Reel 300/reel

H1338NL

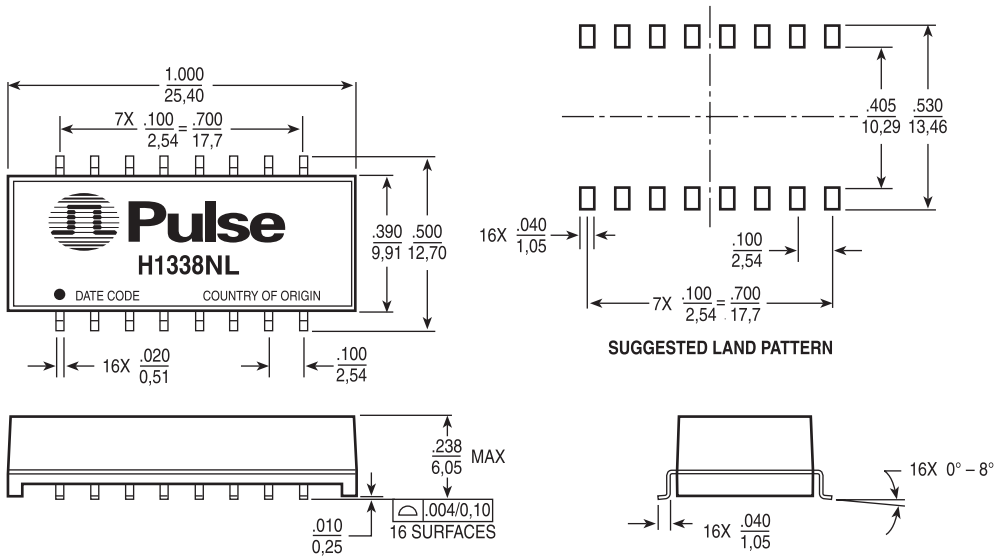

Dimensions: Inches / mm Unless otherwise specified, all tolerances are ± .010 / 0,25

Weight . . . . . 3.0 grams
Tube 20/tube
Tape & Reel 300/reel

10/100 BASE-T SINGLE PORT TRANSFORMER MODULES
With 1:1 Transmit Turns Ratios

Pulse
A TECHNITROL COMPANY

Schematics

PE-68515LNL, H1012NL, H1086NL, H1089NL
HX1148NL, H1138NL

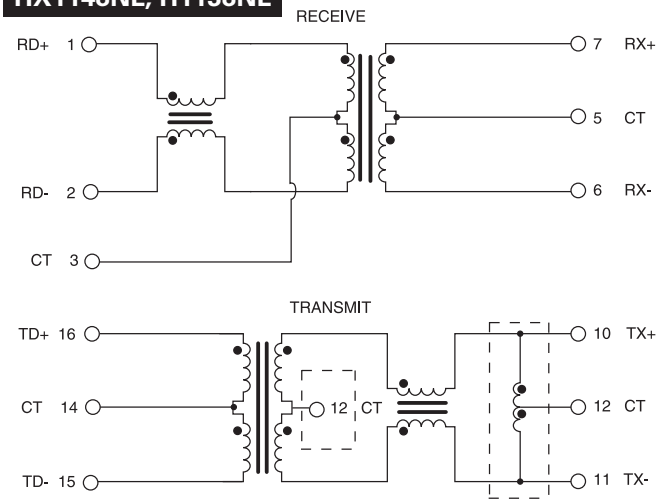

Center-tapped inductor not included in H1089. So, pin 12 connects to the transformer center tap.

PE-68517LNL, H1019NL

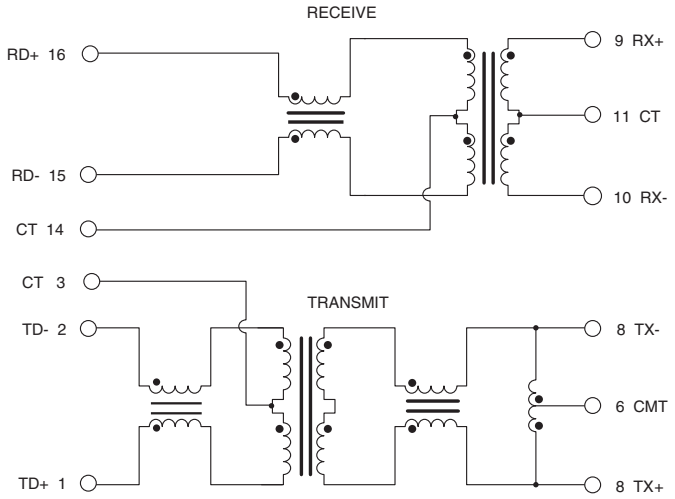

HX1178NL

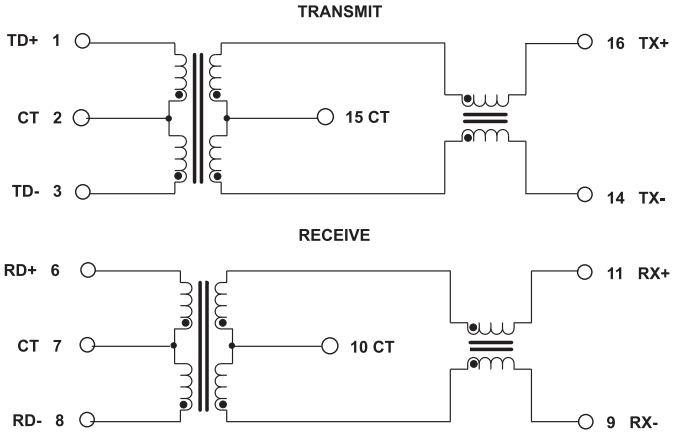

H1042NL

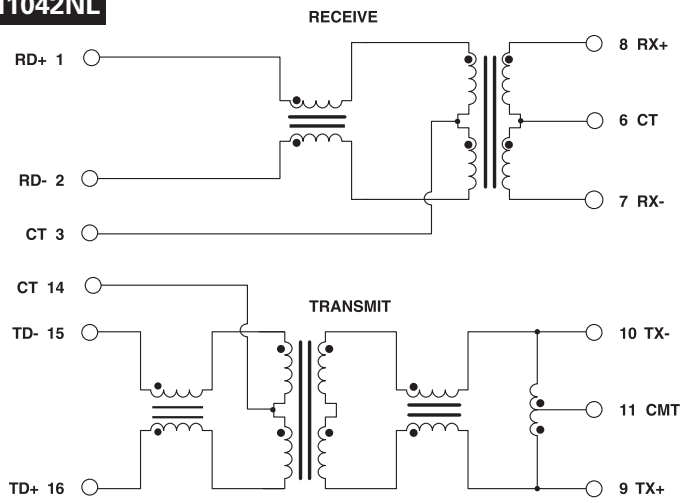

H1338NL

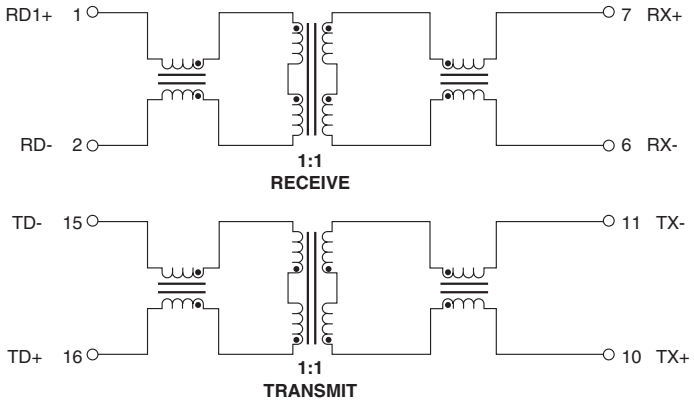

10/100 BASE-T SINGLE PORT TRANSFORMER MODULES
With 1:1 Transmit Turns Ratios

Pulse
A TECHNITROL COMPANY

Typical Application Circuits

H1012NL, H1138NL

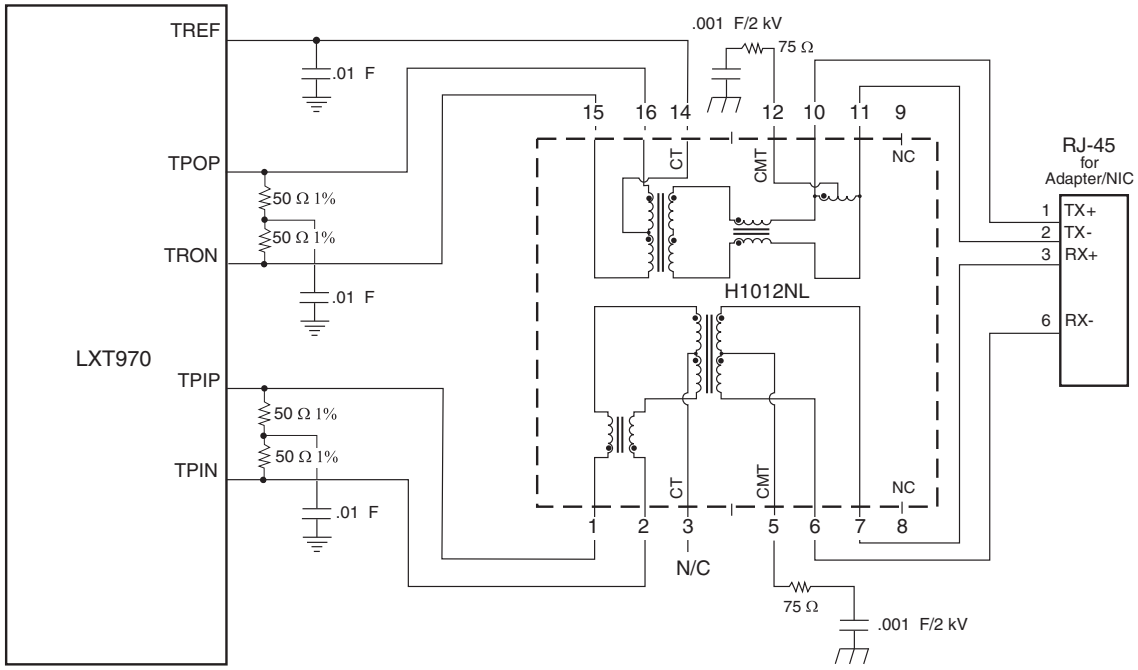

HX1148NL

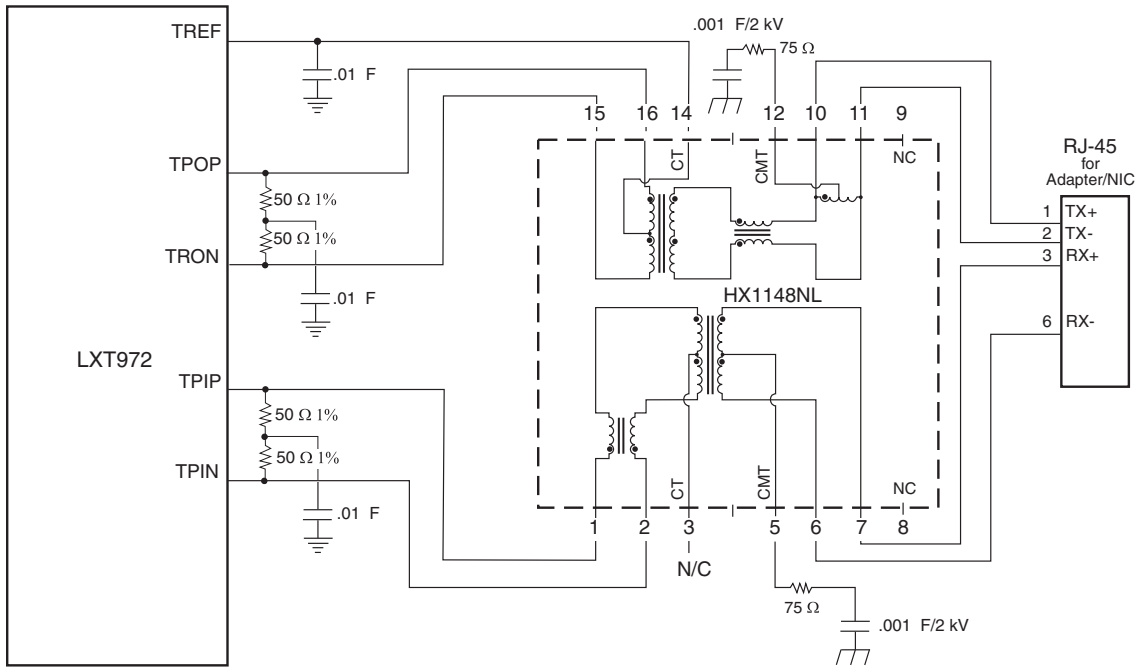

10/100 BASE-T SINGLE PORT TRANSFORMER MODULES
With 1:1 Transmit Turns Ratios

Tape & Reel Specifications

PE-68515LNL, PE-68517LNL, H1042NL

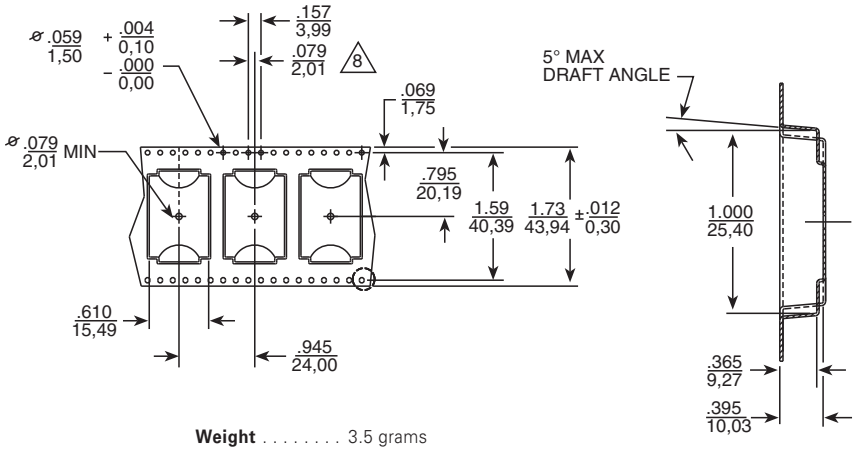

Weight . . . . . 3.5 grams
Tube 20/tube
Tape & Reel 160/reel

H1012NL, H1019NL, H1086NL, H1089NL, H1138NL, H1338NL, HX1148NL, HX1178NL

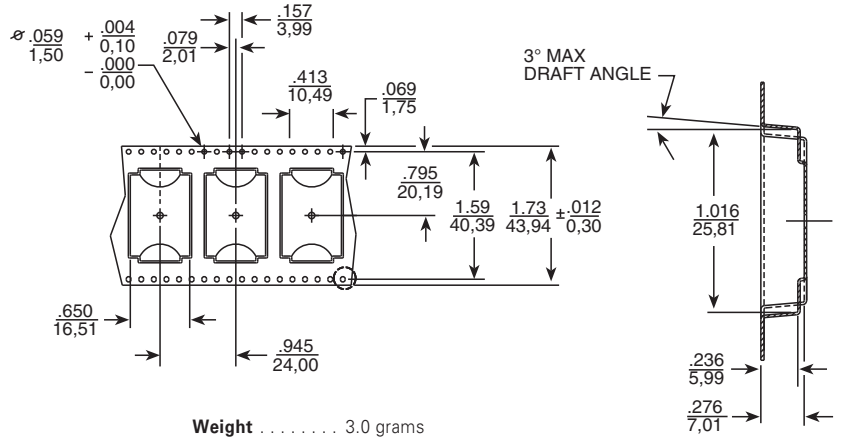

Weight . . . . . 3.0 grams
Tube 20/tube
Tape & Reel 300/reel

For More Information:

Pulse Worldwide Headquarters
12220 World Trade Dr.
San Diego, CA 92128
U.S.A.

www.pulseeng.com
Tel: 858 674 8100
Fax: 858 674 8262

Pulse Europe
Einsteinstrasse 1
D-71083 Herrenberg
Germany

Tel: 49 7032 7806 0
Fax: 49 7032 7806 135

Pulse China Headquarters
B402, Shenzhen Academy of Aerospace Technology Bldg.
10th Kejinan Rd.
High-Tech Zone
Nanshan District
Shenzen, PR China 518057
TEL: 86 755 33966678
FAX: 86 755 33966700

Pulse North China
Room 1503
XinYin Building
No. 888 YiShan Rd.
Shanghai 200233
China

Tel: 86 21 54643211/2
Fax: 86 21 54643210

Pulse South Asia
135 Joo Seng Rd.
#03-02
PM Industrial Bldg.
Singapore 368363

TEL: 65 6287 8998
FAX: 65 6280 0080

Pulse North Asia
No. 26, Kao Ching Rd.
Yang Mei Chen
Taoyuan Hsien
Taiwan
R. O. C.

Tel: 886 3 4643715
Fax: 886 3 4641911

Performance warranty of products offered on this data sheet is limited to the parameters specified. Data is subject to change without notice. Other brand and product names mentioned herein may be trademarks or registered trademarks of their respective owners.
© Copyright, 2009. Pulse Engineering, Inc. All rights reserved.