REV.	DATE	DESCRIPTION
NC	01/14/03	INITIAL RELEASE
A	04/19/06	REVISE CONTACT PIN MATERIAL AND PLATING
B	05/07/06	REVISE INSULATOR MATERIAL TO DELRIN

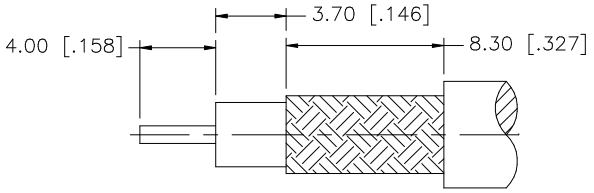

RECOMMENDED CABLE
STRIPPING DIM'S

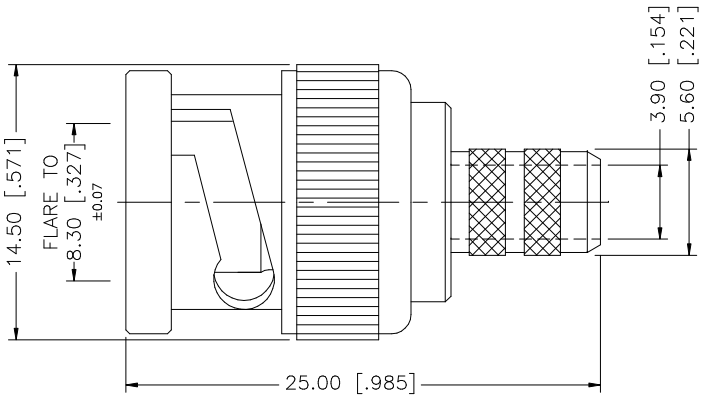

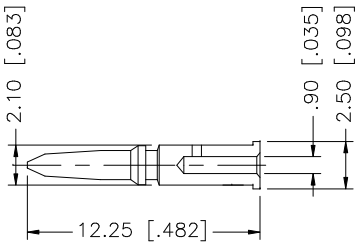

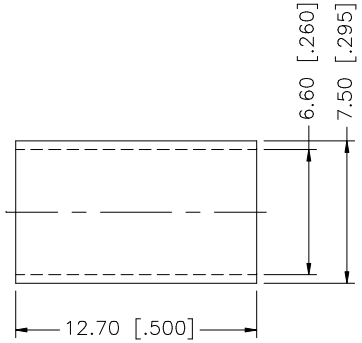

CRIMP NOTES:

1. CRIMPED FERRULE
   HEX CRIMP SIZE .255"
2. CRIMPED CONTACT PIN
   HEX CRIMP SIZE .068"

	DESCRIPTION	MATERIAL	FINISH	QTY
8				
7				
6				
5				
4	FERRULE	BRASS	NICKEL	1
3	INSULATOR	DELRIN	NATURAL	1
2	CONTACT PIN	BRASS	GOLD	1
1	HOUSING/BODY	BRASS	NICKEL	1

UNLESS OTHERWISE SPECIFIED DIMENSIONS ARE IN MILLIMETERS. DIMENSIONS IN [ ] ARE IN INCHES AND FOR CUSTOMER REFERANCE ONLY.

UNLESS OTHERWISE SPECIFIED TOLERANCES FOR MILLIMETERS ARE:
0.5 – 8mm ± 0.20mm
8 – 30mm ± 0.40mm
30 – 120mm ± 0.50mm

UNLESS OTHERWISE SPECIFIED TOLERANCES FOR INCHES ARE:
.020 – .315 = ± 0.007"
.315 – 1.180 = ± 0.015"
1.180 – 4.724 = ± 0.020"

DO NOT SCALE DRAWING

APPROVALS	DATE
DRAWN G.R.S.	05/07/06
CHECKED	
ISSUED	
SHEET 1 OF 1	

CAD FILE C:/112/112507.DWG

Amphenol Connex

PART DESCRIPTION
BNC CRIMP PLUG – RG59/U 20AWG
CENTER CONTACT – 75ohm

PART NO. 112507

DWG. NO.	REV.	SIZE	SCALE
112507.DWG	B	A	NA