REV.	DATE	DESCRIPTION
A	01/10/04	UPDATE DRAWING FORMAT
B	11/16/05	ADD CRIMP NOTES

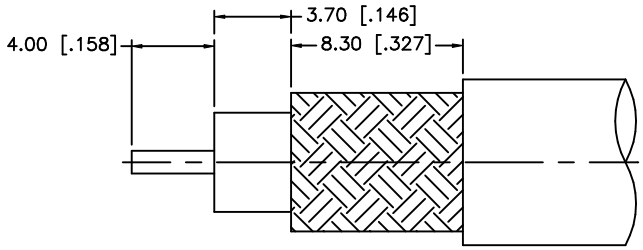

RECOMMENDED CABLE
STRIPPING DIM'S

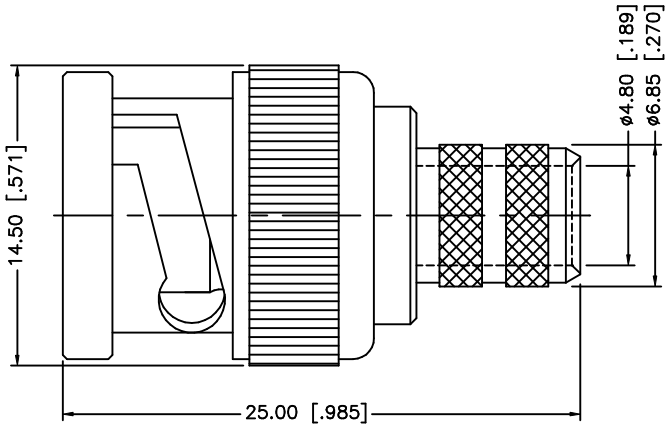

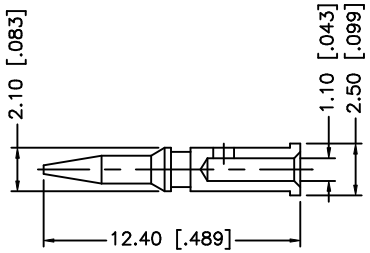

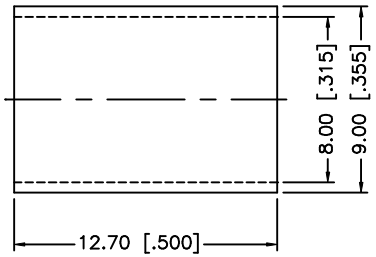

NOTE:

1. CRIMPED FERRULE
   HEX CRIMP SIZE .320"
2. CRIMPED CONTACT PIN
   HEX CRIMP SIZE .068"

8				
7				
6				
5				
4	FERRULE	COPPER	NICKEL	1
3	CONTACT PIN	BRASS	GOLD	1
2	INSULATOR	DELRIN	NATURAL	1
1	BODY	BRASS	NICKEL	1
	DESCRIPTION	MATERIAL	FINISH	QTY

UNLESS OTHERWISE SPECIFIED DIMENSIONS ARE IN MILLIMETERS. DIMENSIONS IN [ ] ARE IN INCHES AND FOR CUSTOMER REFERANCE ONLY.

UNLESS OTHERWISE SPECIFIED TOLERANCES FOR MILLIMETERS ARE:
0.5 – 8mm ± 0.20mm
8 – 30mm ± 0.40mm
30 – 120mm ± 0.50mm

UNLESS OTHERWISE SPECIFIED TOLERANCES FOR INCHES ARE:
.020 – .315 = ± 0.007"
.315 – 1.180 = ± 0.015"
1.180 – 4.724 = ± 0.020"

DO NOT SCALE DRAWING

APPROVALS	DATE
DRAWN G.R.S.	11/16/05
CHECKED	
ISSUED	
SHEET 1 OF 1	

CAD FILE C:/112/112508.DWG

Amphenol Connex

PART DESCRIPTION
BNC CRIMP PLUG RG-6/U CABLE – 75 ohms

PART NO.
112508

DWG. NO.	REV.	SIZE	SCALE
112508.DWG	B	A	NA