FEMALE PLUG M12 90° ANGLED

NOTES:

RATED VOLTAGE: 3, 4 contacts 250V
5 contacts 60V
8 contacts 30V
RATED CURRENT: 3, 4, 5 contacts 4A
8 contacts 2A
TEMPERATURE: SEE CABLE INFORMATION
INSULATION RESISTANCE: 10^8 Ω MIN.
MATING CYCLES: MIN. 100
ENVIRONMENTAL:PROTECTION: IP67 IN MATED AND LOCKED POSITION

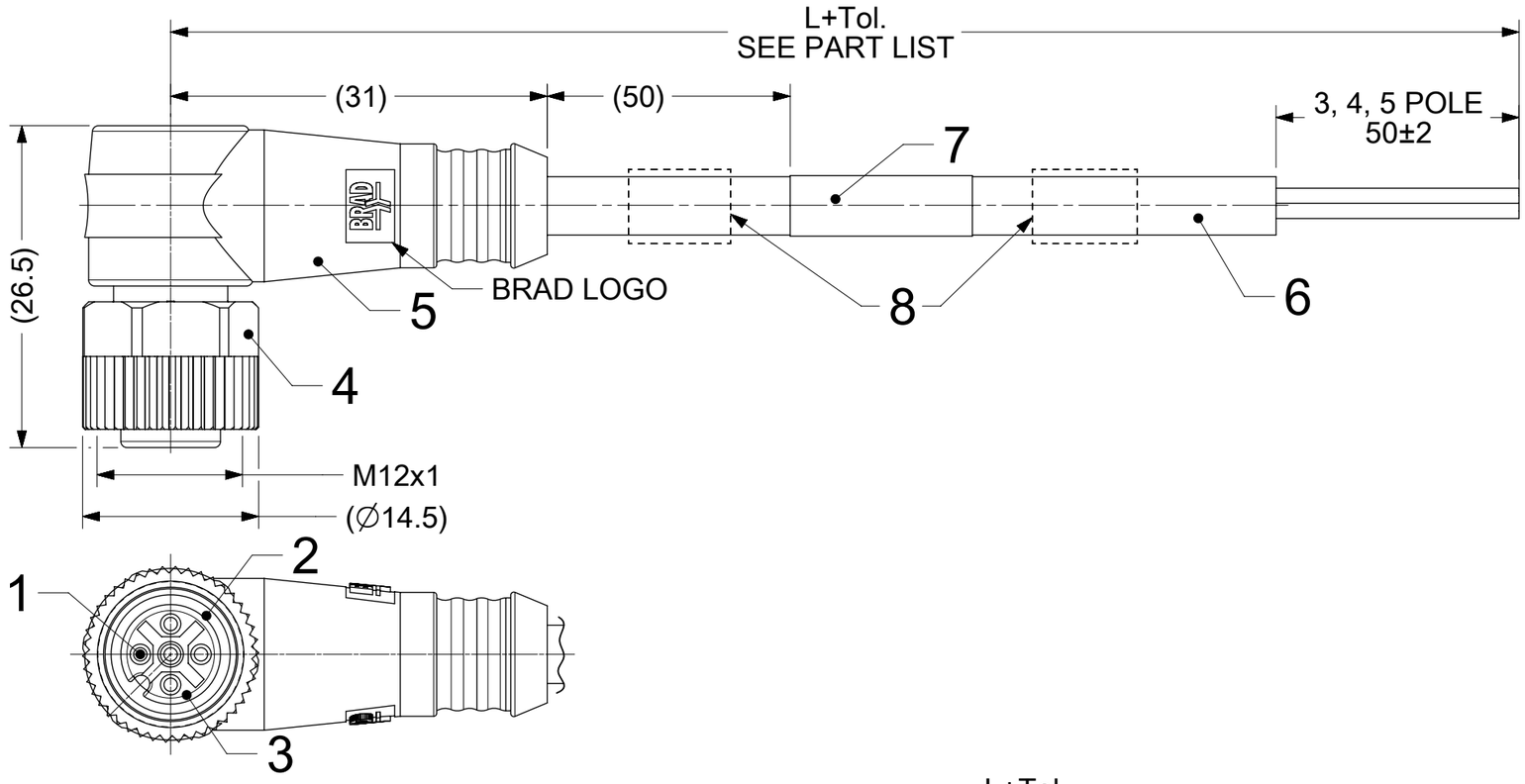

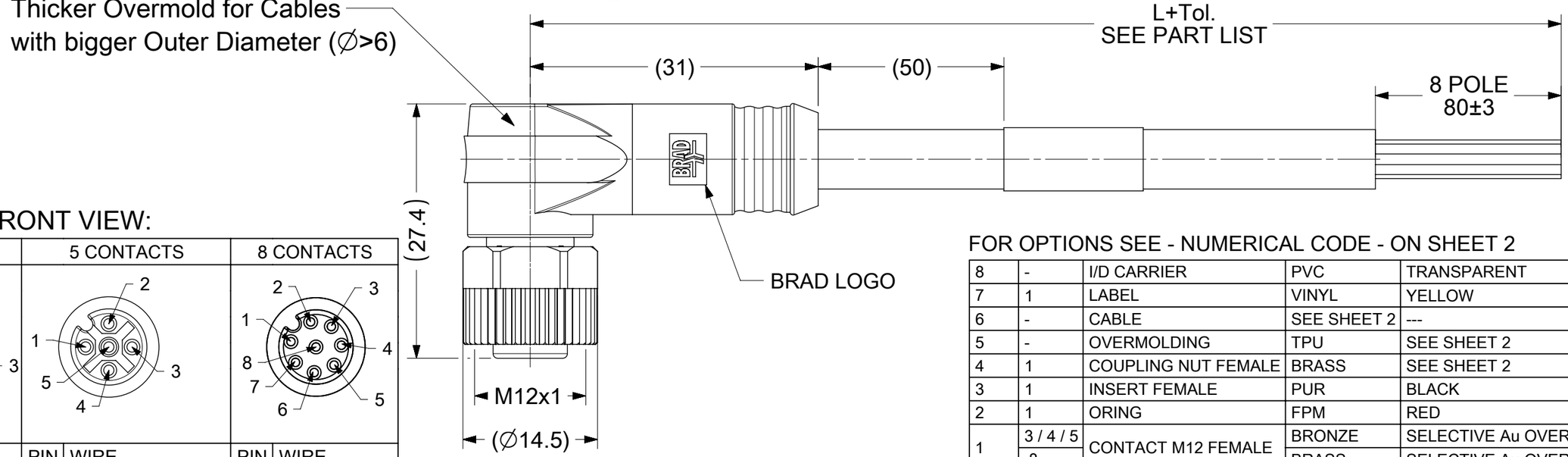

CONTACTS POSITION FRONT VIEW:

3 CONTACTS		4 CONTACTS		5 CONTACTS		8 CONTACTS	
PIN	WIRE	PIN	WIRE	PIN	WIRE	PIN	WIRE
1	BROWN	1	BROWN	1	BROWN	1	WHITE
2	---	2	WHITE	2	WHITE	2	BROWN
3	BLUE	3	BLUE	3	BLUE	3	GREEN
4	BLACK	4	BLACK	4	BLACK	4	YELLOW
5	---	5	---	5	GREY OR GREEN/YELLOW	5	GREY
						6	PINK
						7	BLUE
						8	RED

CODING REQUIRED TO IEC 61076-2-101

DOCUMENT STATUS	P1	RELEASE DATE	2024/10/15 11:44:50

FOR OPTIONS SEE - NUMERICAL CODE - ON SHEET 2

ITEM	QTY.	DESCRIPTION	MATERIAL	FINISH / COLOR
8	-	I/D CARRIER	PVC	TRANSPARENT
7	1	LABEL	VINYL	YELLOW
6	-	CABLE	SEE SHEET 2	---
5	-	OVERMOLDING	TPU	SEE SHEET 2
4	1	COUPLING NUT FEMALE	BRASS	SEE SHEET 2
3	1	INSERT FEMALE	PUR	BLACK
2	1	ORING	FPM	RED
1	3 / 4 / 5	CONTACT M12 FEMALE	BRONZE	SELECTIVE Au OVER Ni
	8		BRASS	SELECTIVE Au OVER Ni

THIS DRAWING CONTAINS INFORMATION THAT IS PROPRIETARY TO MOLEX ELECTRONIC TECHNOLOGIES, LLC AND SHOULD NOT BE USED WITHOUT WRITTEN PERMISSION

FUNCTIONAL SYMBOLS: FA = 0, FC = 0, FV = 0
DIVISIONAL SYMBOLS

DIMENSION UNITS: mm
SCALE: 2:1
GENERAL TOLERANCES (UNLESS SPECIFIED)
ANGULAR TOL ± 1.0 °
4 PLACES ±
3 PLACES ±
2 PLACES ± 0.05
1 PLACE ± 0.3
0 PLACES ± 0.5
DRAFT WHERE APPLICABLE MUST REMAIN WITHIN DIMENSIONS

CURRENT REV DESC: CABLE B02 INFORMATION ADDED TO THE TABLE, NEW PN´S ADDED TO THE PART LIST

EC NO: 801127
DRWN: RSCHIEBER 2024/10/14
CHK'D: RSILLER 2024/10/15
APPR: RSILLER 2024/10/15

INITIAL REVISION:
DRWN: SSM 2021/12/13
APPR: RSILLER 2022/02/28

THIRD ANGLE PROJECTION
DRAWING: A3-SIZE
SERIES: 120065

molex

CSE M12 XP AC FE RA XM SE UNSH

PRODUCT CUSTOMER DRAWING

DOCUMENT NUMBER	DOC TYPE	DOC PART	REVISION
1200656607	PSD	000	B1

MATERIAL NUMBER	CUSTOMER	SHEET NUMBER
SEE SHEET 3	GENERAL MARKET	1 OF 3

ENGINEERING NO. - NUMERICAL CODE (Available parts see PART LIST table. Others on request).

8	0	X	0	0	1	X	X	X	X	X	X	X	X

80=M12x1
Single ended

Contacts:
3=3 Contacts
4=4 Contacts
5=5 Contacts
8=8 Contacts

Heads style:
001=Plug Female
90° Angled

Cable type: See Table

Units:
M=Meter

Length
Examples:
005=0.5 unit
010=1 unit
100=10 units

OVERMOLD COLOR:
BLANK (STANDARD)= BLACK
Y= YELLOW, A= GREY,
G= BLACK, R= RED

COUPLING NUT:
BLANK (STANDARD)= KNURLED /HEX BRASS, Ni PLATED
7 = KNURLED BRASS, Ni PLATED, TEFLON COATED
5 = KNURLED DERLIN

H = 2 pcs. of I/D Carrier
PVC Transparent
(Cables B36 always with
2 pcs. I/D Carrier)

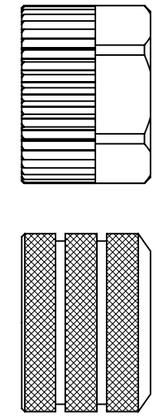

CABLE INFORMATION (for more information see Cable Data Sheet).

CABLE TYPE	NO. OF WIRES	CROSS SECTION	CABLE JACKET	UL	CSA	STATIC: TEMP. / BENDING RADIUS	DYNAMIC: TEMP. / BENDING RADIUS	DRAG CHAIN TESTED	OTHER	CABLE SPEC. DRAWING
B30	3 / 4 / 5	0.34mm²	TPU BLACK	STYLE 21215	YES	-40°C to +90°C, 5xO.D.	-25°C to +80°C, 7.5xO.D.	5 MIO CYCLES	WELD SLAG RESISTANCE	SD-120209-001
B42	5									SD-120209-001
B41	8	0.25mm²								SD-120209-006
B36	4	0.34mm²	TPU ORANGE							SD-120209-001
B33	4 / 5	0.34mm²	TPU GRAY							SD-120209-001
B55	4 / 5	0.34mm²	TPU YELLOW							1552200001 PS
B02	4	0.75mm²	PUR YELLOW	STYLE 20549	YES	-	-	-	-	86-1842

THIS DRAWING CONTAINS INFORMATION THAT IS PROPRIETARY TO MOLEX ELECTRONIC TECHNOLOGIES, LLC AND SHOULD NOT BE USED WITHOUT WRITTEN PERMISSION

FUNCTIONAL SYMBOLS: FA = 0, FC = 0, FP = 0
DIVISIONAL SYMBOLS

DIMENSION UNITS	SCALE
mm	1:1

GENERAL TOLERANCES (UNLESS SPECIFIED)

ANGULAR TOL	±	1.0 °
4 PLACES	±	
3 PLACES	±	
2 PLACES	±	0.05
1 PLACE	±	0.3
0 PLACES	±	0.5

DRAFT WHERE APPLICABLE MUST REMAIN WITHIN DIMENSIONS

CURRENT REV DESC: CABLE B02 INFORMATION ADDED TO THE TABLE, NEW PN´S ADDED TO THE PART LIST

EC NO: 801127
DRWN: RSCHIEBER 2024/10/14
CHK'D: RSILLER 2024/10/15
APPR: RSILLER 2024/10/15

INITIAL REVISION:
DRWN: SSM 2021/12/13
APPR: RSILLER 2022/02/28

THIRD ANGLE PROJECTION | DRAWING: A3-SIZE | SERIES: 120065

molex

CSE M12 XP AC FE RA XM SE UNSH

PRODUCT CUSTOMER DRAWING

DOCUMENT NUMBER	DOC TYPE	DOC PART	REVISION
1200656607	PSD	000	B1

MATERIAL NUMBER	CUSTOMER	SHEET NUMBER
SEE SHEET 3	GENERAL MARKET	2 OF 3

DOCUMENT STATUS	P1	RELEASE DATE	2024/10/15 11:44:50

FORMAT: master_tb_mod-A3
REVISION: J
DATE: 2020/01/14

PART LIST

MOLEX PN	ENGINEERING No	L [mm]
3P CABLE B30		
1200652259	803001B30M010	1000
1200652260	803001B30M020	2000
1200652261	803001B30M050	5000
1200652262	803001B30M100	10000
4P CABLE B30		
1200652263	804001B30M010	1000
1200652264	804001B30M020	2000
1200659470	804001B30M030	3000
1200652265	804001B30M050	5000
1200659807	804001B30M083	8300
1200652266	804001B30M100	10000
1200659401	804001B30M150	15000
1200659471	804001B30M200	20000
1200659472	804001B30M250	25000
1200659473	804001B30M300	30000
5P CABLE B30		
1200659522	805001B30M010	1000
1200659523	805001B30M020	2000
1200656665	805001B30M030	3000
1200659524	805001B30M050	5000
1200659525	805001B30M100	10000
1200659748	805001B30M150	15000
1200656484	805001B30M200	20000
8P CABLE B41		
1200652310	808001B41M010	1000
1200652311	808001B41M020	2000
1200652312	808001B41M050	5000
1200659789	808001B41M083	8300
1200652313	808001B41M100	10000
1200656022	808001B41M150	15000
1200656486	808001B41M200	20000
5P CABLE B42		
1200652267	805001B42M010	1000
1200652268	805001B42M020	2000
1200652269	805001B42M050	5000
1200652270	805001B42M100	10000
1200659542	805001B42M200	20000

MOLEX PN	ENG No.	L [mm]
4P CABLE B33		
1200657144	804001B33M005A	500
1200656607	804001B33M010A	1000
1200656608	804001B33M020A	2000
1200656609	804001B33M030A	3000
1200656610	804001B33M050A	5000
1200656611	804001B33M100A	10000
1200656612	804001B33M150A	15000
1200656613	804001B33M200A	20000
5P CABLE B33		
1200657181	805001B33M005A	500
1200656658	805001B33M010A	1000
1200656659	805001B33M020A	2000
1200656660	805001B33M030A	3000
1200656661	805001B33M050A	5000
1200656662	805001B33M100A	10000
1200656663	805001B33M150A	15000
1200656664	805001B33M200A	20000
1200657182	805001B33M300A	30000
1200657183	805001B33M400A	40000
1200657184	805001B33M500A	50000
4P CABLE B55		
1200656627	804001B55M010Y	1000
1200656628	804001B55M020Y	2000
1200656629	804001B55M030Y	3000
1200656630	804001B55M050Y	5000
1200656631	804001B55M100Y	10000
1200656632	804001B55M150Y	15000
1200656633	804001B55M200Y	20000
5P CABLE B55		
1200656666	805001B55M010Y	1000
1200656667	805001B55M020Y	2000
1200656668	805001B55M030Y	3000
1200656669	805001B55M050Y	5000
1200656670	805001B55M100Y	10000
1200656671	805001B55M150Y	15000
1200656672	805001B55M200Y	20000

MOLEX PN	ENG No.	L [mm]
4P CABLE B36		
1200656852	804001B36M0107Y	1000
1200656391	804001B36M0207H	2000
1200659432	804001B36M0207Y	2000
1200656392	804001B36M0507H	5000
1200659433	804001B36M0507Y	5000
1200656393	804001B36M1007H	10000
1200659434	804001B36M1007Y	10000
4P CABLE B02		
1200651313	804001B02M040	4000
1200651315	804001B02M050	5000

CABLE LENGTH TOLERANCES

LENGTH	TOLERANCE
0 m - 1 m	+40 mm
>1 m - 5 m	+60 mm
>5 m - 10 m	+80 mm
>10 m - 20 m	+140 mm
>20 m - 30 m	+160 mm
>30 m	+1% length

NOTE:
* (STAR) - INDICATES THESE PNS ONLY HAVE ID CARRIER IN BOM.

DOCUMENT STATUS	P1	RELEASE DATE	2024/10/15 11:44:50

FORMAT: molex_shared-A3
REVISION: J
DATE: 2020/01/16

THIS DRAWING CONTAINS INFORMATION THAT IS PROPRIETARY TO MOLEX ELECTRONIC TECHNOLOGIES, LLC AND SHOULD NOT BE USED WITHOUT WRITTEN PERMISSION

FUNCTIONAL SYMBOLS: FA = 0, FC = 0, FP = 0
DIVISIONAL SYMBOLS

DIMENSION UNITS	SCALE
mm	1:1

GENERAL TOLERANCES (UNLESS SPECIFIED)

ANGULAR TOL	± 1.0 °
4 PLACES	±
3 PLACES	±
2 PLACES	± 0.05
1 PLACE	± 0.3
0 PLACES	± 0.5

DRAFT WHERE APPLICABLE MUST REMAIN WITHIN DIMENSIONS

CURRENT REV DESC: CABLE B02 INFORMATION ADDED TO THE TABLE, NEW PN'S ADDED TO THE PART LIST

EC NO: 801127
DRWN: RSCHIEBER 2024/10/14
CHK'D: RSILLER 2024/10/15
APPR: RSILLER 2024/10/15

INITIAL REVISION:
DRWN: SSM 2021/12/13
APPR: RSILLER 2022/02/28

THIRD ANGLE PROJECTION | DRAWING: A3-SIZE | SERIES: 120065

molex

CSE M12 XP AC FE RA XM SE UNSH

PRODUCT CUSTOMER DRAWING

DOCUMENT NUMBER	DOC TYPE	DOC PART	REVISION
1200656607	PSD	000	B1

MATERIAL NUMBER	CUSTOMER	SHEET NUMBER
SEE SHEET 3	GENERAL MARKET	3 OF 3