MATERIAL NO.	ENGINEERING NO.	FINISHED LENGTH
1200490557	E11A06002M003	11.8IN (0.3M)
1201080032	E11A06002M450	147 FT 7.6 (45M)
1201080028	E11A06002M900	295FT 3.30 (90M)

PART NO. MATRIX

E11A06002M005

FINISHED LENGTH
M005= 0.5 METER
M010= 1 METER
M100= 10 METER

CABLE LENGTH TOLERANCES
<.3M [1FT]: +19mm-0 [+.75in-0]
.3 - .9M [1 - 3FT]: +44.5mm-0 [+1.75in-0]
.9 - 1.8M [3 - 6FT]: +55.6mm-0 [+2.19in-0]
1.8 - 3.7M [6 - 12FT: +88.9mm-0 [+3.50in-0]
3.7 - 7.3M [12 - 24FT]: +165.1mm-0 [+6.50in-0]
7.3-14.6M [24 - 48FT]: +317.5mm-0 [+12.50in-0]
14.6 - 30.5M [48-100FT]: +622.3mm-0 [+24.50in-0]
OVER 30M [100FT] +2% OF FINISHED LENGTH

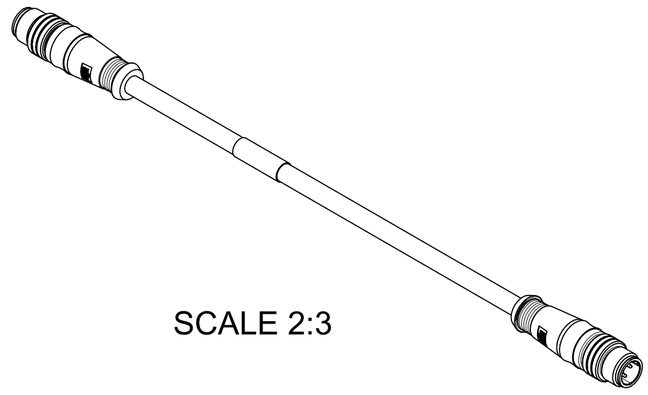

SCALE 2:3

NOTES:
1. MATERIAL: AS NOTED
2. FINISH: AS NOTED
3. ELECTRICAL SPECIFICATIONS
   VOLTAGE RATING: 125V
   CURRENT RATING: 1.5A
4. TEMP RANGE: -25°C TO +75°C
5. PROTECTION: IP67 (WHEN MATED)
6. UL FILE: E361772
7. ALL DIMS ARE FOR REFERNCE UNLESS TOLERNACED OR NOTED OTHERWISE.
8. TRANSMISSION PERFORMANCE TEST FOR CABLES UP TO 20m ACC. CAT5e PATCHCORD
9. TRANSMISSION PERFORMANCE TEST FOR CABLES OVER 20m ACC. CAT5e CHANNEL

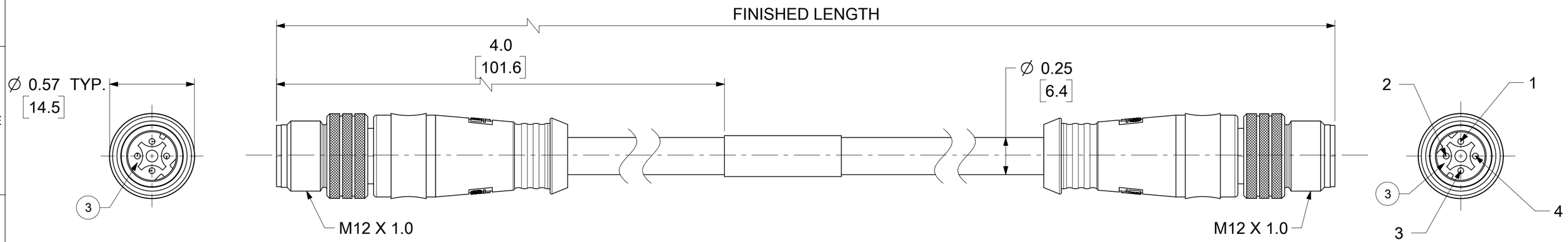

MALE FACE VIEW

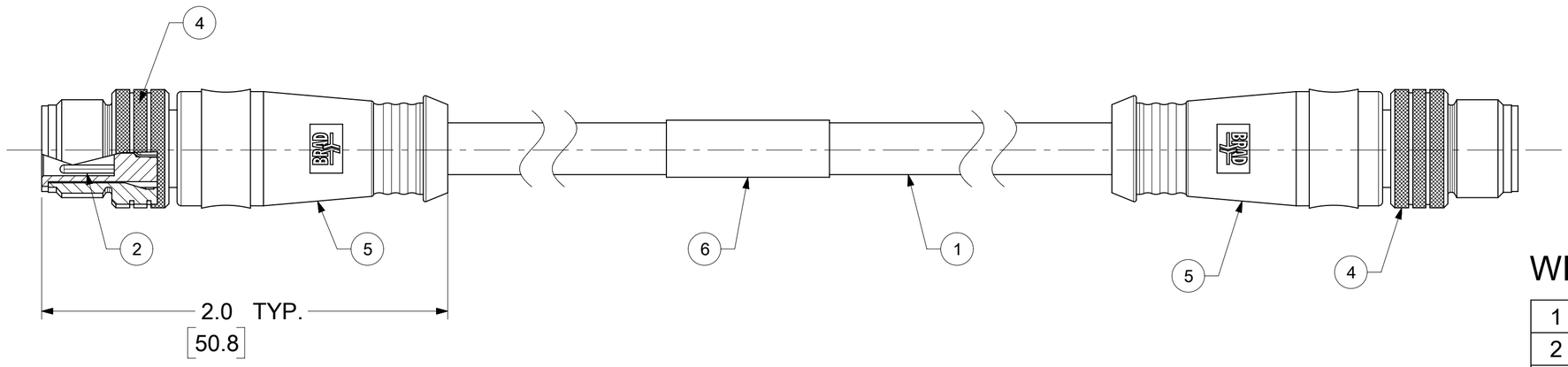

MALE FACE VIEW

WIRING DIAGRAM

1	ORANGE/WHITE	1
2	BLUE/WHITE	2
3	ORANGE	3
4	BLUE	4

ITEM	DESCRIPTION	MATERIAL	FINISH
6	LABEL	VINYL	BLACK/WHITE
5	OVERMOLD	TPU	BLACK
4	M12 MALE COUPLING NUT	BRASS	NICKEL
3	M12 D-CODE 4P MALE INSERT	PUR	BLACK
2	CONTACT PIN	COPPER ALLOY	GOLD PLATED
1	CABLE, 24-4, ETHERNET	PVC JACKET	TEAL

DOCUMENT STATUS | P1 | RELEASE DATE | 2023/09/12 07:55:16

THIS DRAWING CONTAINS INFORMATION THAT IS PROPRIETARY TO MOLEX ELECTRONIC TECHNOLOGIES, LLC AND SHOULD NOT BE USED WITHOUT WRITTEN PERMISSION

FUNCTIONAL SYMBOLS
FA = 0
FC = 0
FP = 0
DIVISIONAL SYMBOLS

DIMENSION UNITS: INCH/MM
SCALE: 2:1

GENERAL TOLERANCES (UNLESS SPECIFIED)

	MM	INCH
4 PLACES	±	±
3 PLACES	±	±
2 PLACES	± 0.05	±
1 PLACE	± 0.3	±
0 PLACES	± 0.5	±
ANGULAR TOL	± 1.0 °	

DRAFT WHERE APPLICABLE MUST REMAIN WITHIN DIMENSIONS

CURRENT REV DESC: ADDED NOTES 8 & 9.

EC NO: 762436
DRWN: CRAODOREMS 2023/08/04
CHK'D: RSILLER 2023/09/12
APPR: RSILLER 2023/09/12

INITIAL REVISION:
DRWN: NSTAUDIGEL 2010/02/08
APPR: fpacher 2010/02/11

THIRD ANGLE PROJECTION | DRAWING: C-SIZE | SERIES: 120049

molex

MICRO-CHANGE CORDSET, M12
4 POLE, MALE-MALE, STRAIGHT, D-CODE, 24/4
CAT-5E

PRODUCT CUSTOMER DRAWING

DOCUMENT NUMBER	DOC TYPE	DOC PART	REVISION
SD-120049-001	PSD	001	A1

MATERIAL NUMBER	CUSTOMER	SHEET NUMBER
SEE TABLE	GENERAL MARKET	1 OF 2

FORMAT: Eng-lega-master-tb-prod-C
REVISION: E
DATE: 2020/01/14

PART LIST

MOLEX PN	ENGINEERING	L [mm]
1300480084	E11A06002M005	500
1200490417	E11A06002M010	1000
1200490490	E11A06002M020	2000
1201080027	E11A06002M030	3000
1300480222	E11A06002M040	4000
1300480085	E11A06002M050	5000
1201088001	E11A06002M060	6000
1201080039	E11A06002M080	8000
1201080038	E11A06002M100	10000
1201080037	E11A06002M150	15000
1300480086	E11A06002M180	18000
1201080036	E11A06002M200	20000
1201080035	E11A06002M230	23000
1201080124	E11A06002M270	27000
1201080034	E11A06002M300	30000
1201080125	E11A06002M340	34000
1300480005	E11A06002M350	35000
1201080033	E11A06002M380	38000
1201080126	E11A06002M420	42000
1201080032	E11A06002M450	45000
1300480007	E11A06002M500	50000
1201080031	E11A06002M530	53000
1201080127	E11A06002M570	57000
1201080030	E11A06002M600	60000
1201080128	E11A06002M650	65000
1300480008	E11A06002M700	70000
1201080029	E11A06002M760	76000
1200490457	E11A06002M800	80000
1201080129	E11A06002M850	85000
1201080028	E11A06002M900	90000
1201080120	E11A06002T100	100000

DOCUMENT STATUS	P1	RELEASE DATE	2023/09/12 07:55:16

FORMAT: master-tb-prod-A4
REVISION: J1
DATE: 2021/05/01

THIS DRAWING CONTAINS INFORMATION THAT IS PROPRIETARY TO MOLEX ELECTRONIC TECHNOLOGIES, LLC AND SHOULD NOT BE USED WITHOUT WRITTEN PERMISSION

FUNCTIONAL SYMBOLS
FA = 0
FC = 0
FD = 0
DIVISIONAL SYMBOLS

DIMENSION UNITS	SCALE
INCH/MM	1:1

GENERAL TOLERANCES (UNLESS SPECIFIED)

ANGULAR TOL	± 1.0 °
4 PLACES	±
3 PLACES	±
2 PLACES	± 0.05
1 PLACE	± 0.3
0 PLACES	± 0.5

DRAFT WHERE APPLICABLE MUST REMAIN WITHIN DIMENSIONS

CURRENT REV DESC: ADDED NOTES 8 & 9.

EC NO: 762436
DRWN: CRAODOREMS 2023/08/04
CHK'D: RSILLER 2023/09/12
APPR: RSILLER 2023/09/12

INITIAL REVISION:
DRWN: NSTAUDIGEL 2010/02/08
APPR: fpacher 2010/02/11

THIRD ANGLE PROJECTION | DRAWING: A4-SIZE | SERIES: 120049

molex

MICRO-CHANGE CORDSET, M12
4 POLE, MALE-MALE, STRAIGHT, D-CODE, 24/4
CAT-5E

PRODUCT CUSTOMER DRAWING

DOCUMENT NUMBER	DOC TYPE	DOC PART	REVISION
SD-120049-001	PSD	001	A1

MATERIAL NUMBER	CUSTOMER	SHEET NUMBER
	GENERAL MARKET	2 OF 2