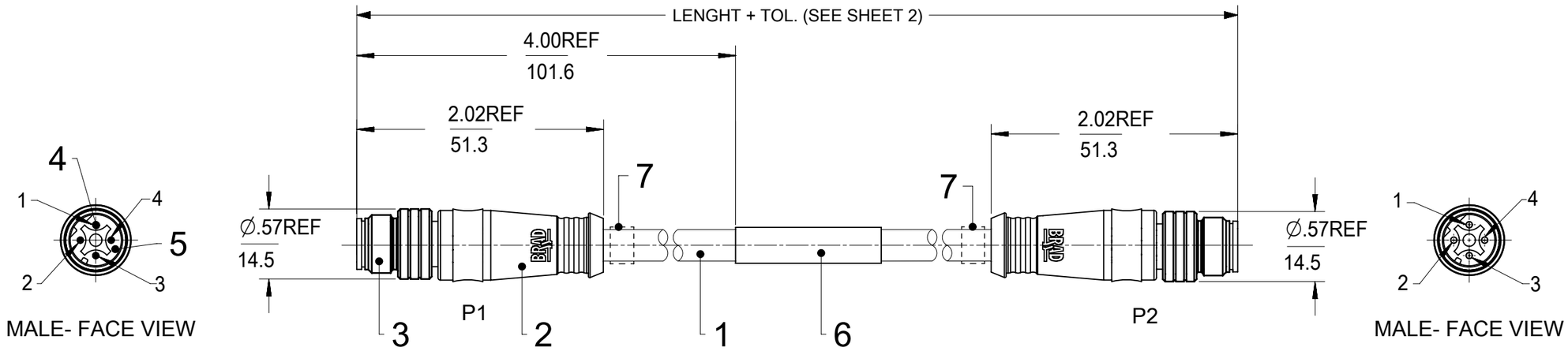

ADDITIONAL CABLE PARAMETERS

PHYSICAL CHARACTERISTICS:	
CONDUCTOR PAIR SIZE	#22 (7 X #30) BARE COPPER ALLOY
WIRE CROSS SECTION	0.34mm² (NOM.)
INSULATION TYPE	POLYOLEFIN INSULATION
FOIL SHIELD	PLASTIC/ALUMINIUM FOIL WITH FOIL OUT
BRAID SHIELD	TINNED COPPER BRAID WITH MIN. 85% COVERAGE
OUTSIDE DIAMETER	∅ 6.8mm (.267")
JACKET INSULATION	GREEN PUR
PROFINET CABLE STYLE	TYPE C

ENVIRONMENTAL CHARACTERISTICS:	
FLAME RESISTANCE	FT2
AGENCY CERTIFICATIONS	UL AND CSA
OPERATION TEMPERATURE	-20°C TO 60°C
STORAGE TEMPERATURE	-40°C TO 80°C
HALOGEN FREE	IEC 60754-1
SILICONE FREE	YES
CFC-FREE	YES

MECHANICAL CHARACTERISTICS FOR C-TRACK APPLICATIONS:	
MIN. BENDING RADIUS	15xCABLE DIAMETER
OPERATING WAY	5M OF TRAVEL

IMPRINT: E172949 AWM STYLE 20549 AWM
I A/B 80°C 300V FT2 – 9YH(ST)C11Y INDUSTRIAL ETHERNET PROFINET
TYPE C 2x2x22AWG/7 - RoHS "week/year"

WIRING DIAGRAM

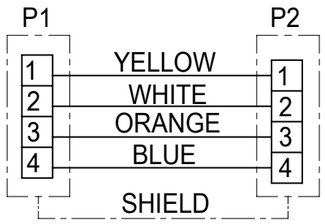

NOTES:

1) MATERIAL: SEE TABLE
2) FINISHES: SEE TABLE
3) CABLE: #22/4 SHIELDED PUR
4) ELECTRICAL DATA:
   ACCORDING TO CAT5e ETHERNET STANDARD
   VOLTAGE RATING : 250V
   AMPERAGE RATING : 4A
   INSULATION RESISTANCE : $10^8\Omega$ MIN.
   MATING CYCLES : MIN. 100
5) ENVIRONMENTAL :
   PROTECTION : IP67 IN MATED AND LOCKED POSITION
   OPERATING TEMPERATURE : -25°C TO +85°C
6) WRAP LABEL IS MARKED WITH P/N, DATE CODE,
   VOLTAGE & AMPERAGE.
7) ASSEMBLY IS RoHS COMPLIANT.

BOM: (2 QTY ID CARRIER APPLICABLE, IF ENGINEERING No. HAS "H" {SEE TABLE2})

ITEM	QTY.	DESCRIPTION	MATERIAL	FINISH/COLOR
7	2	ID CARRIER	PVC	TRANSPARENT
6	1	LABEL 50x69.8	VINYL	WHITE
5	2	INSERT	PUR	BLACK
4	8	PIN CONTACT	COPPER ALLOY	GOLD PLATED
3	2	M12 COUPLING NUT	BRASS	Ni-PLATED
2	-	OVERMOLD	PUR	BLACK
1	1	CABLE	PUR JACKET	GREEN

THIS DRAWING CONTAINS INFORMATION THAT IS PROPRIETARY TO MOLEX ELECTRONIC TECHNOLOGIES, LLC AND SHOULD NOT BE USED WITHOUT WRITTEN PERMISSION

FUNCTIONAL SYMBOLS: F/A = 0, F/C = 0, F/P = 0
DIVISIONAL SYMBOLS

DIMENSION UNITS: INCH/MM
SCALE: 1:1

GENERAL TOLERANCES (UNLESS SPECIFIED)

ANGULAR TOL	±	0.5 °
4 PLACES	±	
3 PLACES	±	
2 PLACES	±	0.13
1 PLACE	±	0.25
0 PLACES	±	

DRAFT WHERE APPLICABLE MUST REMAIN WITHIN DIMENSIONS

CURRENT REV DESC:

EC NO: 672185
DRWN: SSM 2021/06/28
CHK'D: RSILLER 2021/09/20
APPR: RSILLER 2021/09/20

INITIAL REVISION:
DRWN: BRUPERT 2011/11/23
APPR: JFMURPHY 2012/04/17

THIRD ANGLE PROJECTION | DRAWING: A3-SIZE | SERIES: 120108

molex

MIC 4P M/MP ST/ST D-CODE

PRODUCT CUSTOMER DRAWING

DOCUMENT NUMBER	DOC TYPE	DOC PART	REVISION
SD-120108-041	PSD	001	G

MATERIAL NUMBER	CUSTOMER	SHEET NUMBER
SEE PART LIST	GENERAL MARKET	1 OF 2

DOCUMENT STATUS	P1	RELEASE DATE	2021/09/20 12:58:08

FORMAT: master_sheet_iso A3
REVISION: J
DATE: 2020/01/14

PART LIST

MOLEX PN	ENGINEERING NO	L+TOL. [mm]
1201080236	E11A06011M010	1000
1201080199	E11A06011M020	2000
1201080237	E11A06011M030	3000
1201080213	E11A06011M040	4000
1201080238	E11A06011M050	5000
1201080239	E11A06011M060	6000
1201080240	E11A06011M070	7000
1201080241	E11A06011M080	8000
1201080242	E11A06011M090	9000
1201080243	E11A06011M100	10000
1201080244	E11A06011M120	12000
1201080245	E11A06011M140	14000
1201080246	E11A06011M150	15000
1201080247	E11A06011M180	18000
1201080248	E11A06011M200	20000
1201080249	E11A06011M240	24000
1201088256	E11A06011M250	25000
1201080250	E11A06011M300	30000
1201088257	E11A06011M350	35000
1201080281	E11A06011M400	40000
1201080251	E11A06011M500	50000
1201080282	E11A06011M600	60000
1201080283	E11A06011M700	70000
1201080287	E11A06011M750	75000
1201080284	E11A06011M800	80000
1201080288	E11A06011M900	90000
1201088201	E11A06011T100	100000

MOLEX PN	ENGINEERING NO	L+TOL. [mm]
WITH ID CARRIER		
1201088267	E11A06011M010H	1000
1201089062	E11A06011M020H	2000
1201089063	E11A06011M030H	3000
1201089064	E11A06011M045H	4500
1201088268	E11A06011M050H	5000
1201089065	E11A06011M060H	6000
1201089066	E11A06011M080H	8000
1201088269	E11A06011M100H	10000
1201089067	E11A06011M120H	12000
1201089068	E11A06011M130H	13000
1201088270	E11A06011M150H	15000
1201089069	E11A06011M200H	20000
1201088271	E11A06011M300H	30000
1201088282	E11A06011M400H	40000
1201088283	E11A06011M600H	60000
1201088284	E11A06011M700H	70000
1201088285	E11A06011M900H	90000

PART No MATRIX

E	1	1	A	0	6	0	1	1	M	X	X	X	X

OPTIONS

- E=ETHERNET
- HEADS
  1 = M12 D-Coding
  1 = M12 D-Coding
- WIRING TYPE:
  A=4 Pole
  (STRAIGHT WIRED)
- HEADS STYLE:
  060 = MALE STR / MALE STR
- CABLE TYPE
  SEE CABLE TABLE
- UNITS :
  M= METER
  T=10x METER
- LENGTH EXAMPLES:
  005=0.5
  010=1
  150=15
- H=2 PCS. OF I/D Carrier

CABLE LENGTH TOLERANCES

LENGTH	TOLERANCE
0 m-1 m	+40 mm
>1 m-5 m	+60 mm
>5 m-10 m	+80 mm
>10 m-20 m	+140 mm
>20 m-30 m	+160 mm
>30 m	+1% length

FUNCTIONAL SYMBOLS
FA = 0
FC = 0
FD = 0
DIVISIONAL SYMBOLS

THIS DRAWING CONTAINS INFORMATION THAT IS PROPRIETARY TO MOLEX ELECTRONIC TECHNOLOGIES, LLC AND SHOULD NOT BE USED WITHOUT WRITTEN PERMISSION

DIMENSION UNITS	SCALE
INCH/MM	1:1

GENERAL TOLERANCES (UNLESS SPECIFIED)

ANGULAR TOL	±	0.5 °
4 PLACES	±	
3 PLACES	±	
2 PLACES	±	0.13
1 PLACE	±	0.25
0 PLACES	±	

DRAFT WHERE APPLICABLE MUST REMAIN WITHIN DIMENSIONS

CURRENT REV DESC:

EC NO: 672185
DRWN: SSM 2021/06/28
CHK'D: RSILLER 2021/09/20
APPR: RSILLER 2021/09/20

INITIAL REVISION:
DRWN: BRUPERT 2011/11/23
APPR: JFMURPHY 2012/04/17

THIRD ANGLE PROJECTION | DRAWING: A3-SIZE | SERIES: 120108

molex

MIC 4P M/MP ST/ST D-CODE

PRODUCT CUSTOMER DRAWING

DOCUMENT NUMBER	DOC TYPE	DOC PART	REVISION
SD-120108-041	PSD	001	G

MATERIAL NUMBER	CUSTOMER	SHEET NUMBER
SEE PART LIST	GENERAL MARKET	2 OF 2

DOCUMENT STATUS	P1	RELEASE DATE	2021/09/20 12:58:08

FORMAT: master_Sized-A3
REVISION: J
DATE: 2020/01/14