Vehicle charging inlet - CHARX T1HCI12-1AC48-2,0M1 - 1271960

Please be informed that the data shown in this PDF Document is generated from our Online Catalog. Please find the complete data in the user's documentation. Our General Terms of Use for Downloads are valid
(http://phoenixcontact.com/download)

The figure shows a version of the product

CHARX connect, Vehicle charging inlet, Locking actuator top, For charging electric vehicles with alternating current (AC), For installation in electric vehicles (EV), AC type 1, IEC 62196-2, SAE J1772, 48 A / 250 V (AC), length: 2 m, Locking actuator: 12 V, 4-position, M6, Generation 4, A protective cap is supplied as standard for the AC contacts.

Product Description

Vehicle charging inlet for charging with alternating current (AC), compatible with type 1 AC vehicle charging connectors (EVSE), for installation in electric vehicles for e-mobility (EV).

Your advantages

- Uniform, space-saving dimensions and screw connection points for all Phoenix Contact AC vehicle charging inlets
- Silver-plated surface of the power and signal contacts
- Developed and produced in accordance with the IATF 16949 automotive standard and ISO 9001
- Material data available in the IMDS (International Material Data System of the automotive industry)
- Tested in accordance with selected tests of automotive standards LV124, LV214, LV215-2
- Manual emergency release of the locking actuator
- Integrated interlock during charging
- Integrated temperature sensors for monitoring the temperature at the power contacts

RoHS

Key Commercial Data

Packing unit	1 pc
GTIN	4 063151 463229
GTIN	4063151463229
Custom tariff number	85444290
Country of origin	Germany

Vehicle charging inlet - CHARX T1HCI12-1AC48-2,0M1 - 1271960

Technical data

Product definition

Type	Locking actuator top
Application	For charging electric vehicles with alternating current (AC)
	For installation in electric vehicles (EV)
Design	Generation 4
Standards/regulations	IEC 62196-2
	SAE J1772
Charging standard	AC type 1
Charging mode	Mode 2, 3
Note	A protective cap is supplied as standard for the AC contacts.
Note on the connection method	Crimp connection, cannot be disconnected

Dimensions

Height	90 mm
Width	90 mm
Depth	112.2 mm
Bore dimensions	73 mm x 73 mm, 73 mm x 73 mm
Conductor length	2 m (AC sheathed cable)
	1 m (Locking actuator cables)
	1 m (Temperature sensors cables)
	1 m (Communications cables)

Ambient conditions

Ambient temperature (operation)	-40 °C ... 60 °C
Ambient temperature (storage/transport)	-40 °C ... 85 °C
Max. altitude	4000 m (above sea level)
Degree of protection	IP55 (plugged in; when plugged in and ready to operate, the degree of protection is only ensued if both plug-in components are original products from Phoenix Contact or suitable standard-compliant products)
	IP67 (Inner area of vehicle charging inlet)

Electrical properties

Charging power (nominal operation)	12 kW
Type of charging current	AC single-phase
Number of phases	1
Number of power contacts	3 (L1, N, PE)
Rated current of power contacts	48 A AC
Rated voltage for power contacts	250 V AC
Number of signal contacts	2 (CP, CS)
Rated current for signal contacts	2 A

Vehicle charging inlet - CHARX T1HCI12-1AC48-2,0M1 - 1271960

Technical data

Electrical properties

Rated voltage for signal contacts	30 V AC
Type of signal transmission	Pulse width modulation with modulated Powerline communication according to ISO/IEC 15118 / DIN SPEC 70121
Note on the connection method	Crimp connection, cannot be disconnected
Insulation resistance of neighboring contacts	> 200 MΩ
Resistor coding	2.7 kΩ (between PE and CS)
Temperature monitoring	AC contacts: PTC chain (DIN#EN#60738-1)

Mechanical properties

Insertion/withdrawal cycles	> 10000
Insertion force	< 75 N
Withdrawal force	< 75 N

Mounting

Restrictions to mounting position	Only 0 to 90 degree frontal inclination possible, see figure
Mounting position of the locking actuator	Top center
Mounting hole diameter	6.70 mm (ø)
Required mounting screws	M6
Screws included in the scope of delivery	none

Design

Design line	Generation 4
Housing color	black
Customer variations	On request

Material

Material	Plastic
Flammability rating	V0
Material surface of contacts	Ag

Locking

Locking type	Locking in the inserted state with a locking mechanism

AC cable

Cable structure	3 x 6 mm²
External cable diameter	13.8 mm ±0.3 mm
Cable resistance	≤ 3.2 Ω/km
Outer sheath, material	Silicone
External sheath, color	orange
Minimum bending radius	3 x D
Cable weight	approx. 385 kg/km

Vehicle charging inlet - CHARX T1HCI12-1AC48-2,0M1 - 1271960

Technical data

Locking actuator cable

Cable structure	4 x 0.5 mm²
External cable diameter	1.6 mm -0.2 mm
Cable resistance	≤ 37.1 Ω/km
Outer sheath, material	PVC
Single wire, color	BU/RD, BU/GN, BU/YE, BU/BN
Minimum bending radius	15 mm
Cable weight	7 kg/km

Temperature sensor cable

Cable structure	2 x 0.5 mm²
External cable diameter	1.6 mm -0.2 mm
Cable resistance	≤ 37.1 Ω/km
Outer sheath, material	PVC
Single wire, color	brown, gray
Minimum bending radius	15 mm
Cable weight	7 kg/km

Cable communication

Cable structure	0.5 mm² + 0.5 mm²
External cable diameter	1.6 mm -0.2 mm
Cable resistance	≤ 37.1 Ω/km
Outer sheath, material	PVC
Single wire, color	black PP/CS
	white CP
Minimum bending radius	15 mm
Cable weight	7 kg/km

Locking actuator

Number of positions of theconnectors	4
Operating voltage	12 V (Typical power supply at the motor)
Possible power supply range at the motor	9 V ... 16 V
Maximum voltage for locking detection	12 V
Typical motor current for locking	0.25 A
Reverse current of the motor	max. 1.5 A
Max. dwell time with reverse current	1 s
Recommended adaptation time	600 ms
Pause time after entry or exit path	3 s
Service life insertion cycles	> 10000 load cycles
Ambient temperature (operation)	-40 °C ... 80 °C

Vehicle charging inlet - CHARX T1HCI12-1AC48-2,0M1 - 1271960

Technical data

Locking actuator

Cable length	1 m
Cable structure	4 x 0.5 mm²
Lock recognition	available
Mechanical emergency release	available

Temperature monitoring, AC contacts

Type of sensor	PTC chain
Standards/regulations	DIN#EN 60738-1
Recommended measured current	≤ 1 mA (U_{max}= 16 V DC)
Tolerance at the sensor with the recommended measured current	±5K
Temperature range	-40 °C ... 130 °C

Drawings

Diagram

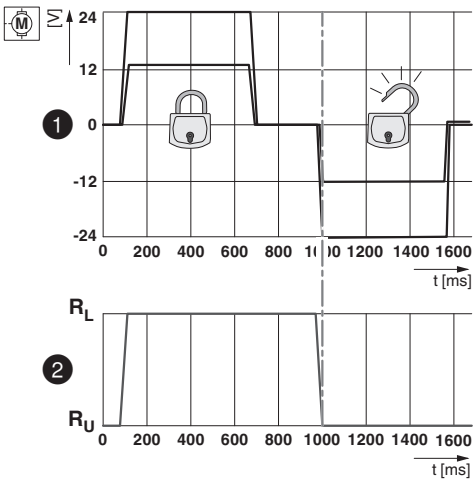

Locking states of the locking actuator

Schematic diagram

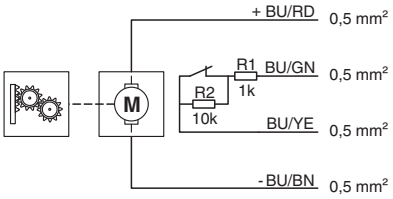

Block diagram of the locking actuator

Vehicle charging inlet - CHARX T1HCI12-1AC48-2,0M1 - 1271960

Connection diagram

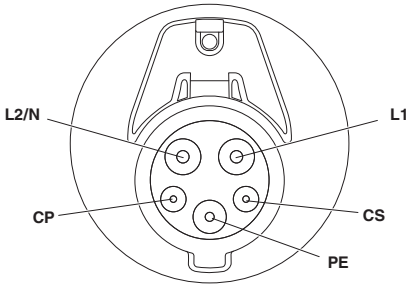

Pin assignment of Vehicle Inlet

Dimensional drawing

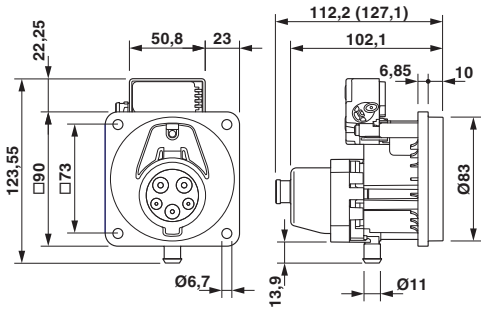

Dimensional drawing

Schematic diagram

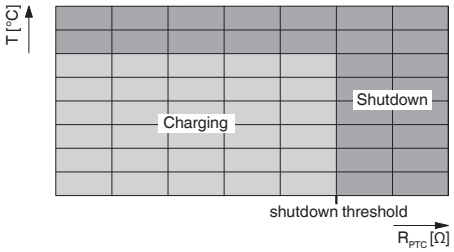

Temperature sensor technology resistance range at AC contacts

Vehicle charging inlet - CHARX T1HCI12-1AC48-2,0M1 - 1271960

Connection diagram

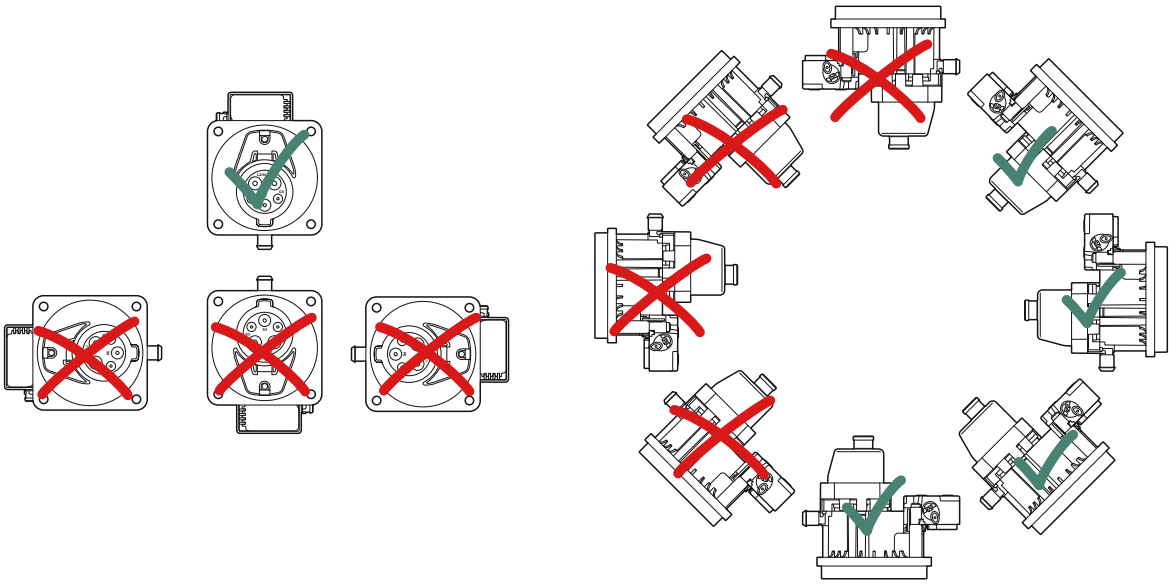

Installation positions

Vehicle charging inlet - CHARX T1HCI12-1AC48-2,0M1 - 1271960

Connection diagram

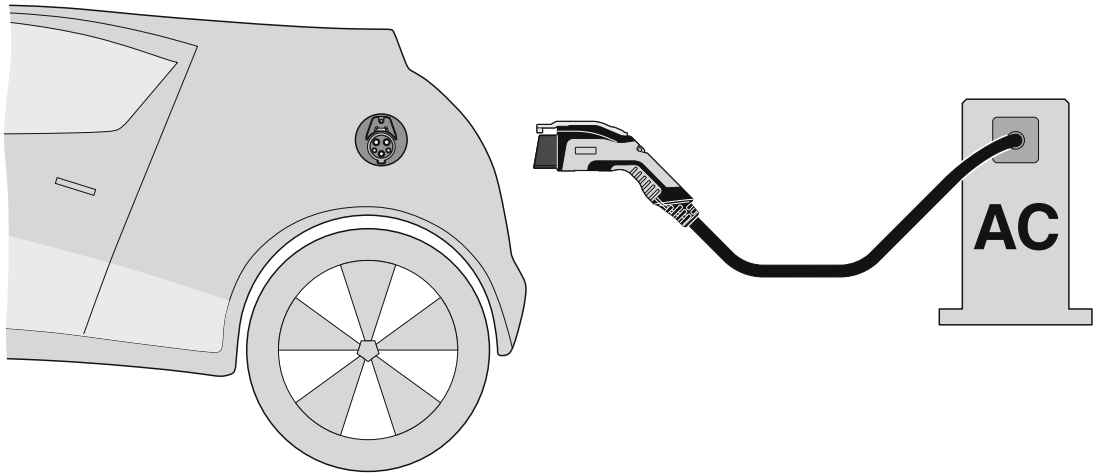

Terminology definition

Vehicle charging inlet - CHARX T1HCI12-1AC48-2,0M1 - 1271960

Functional drawing

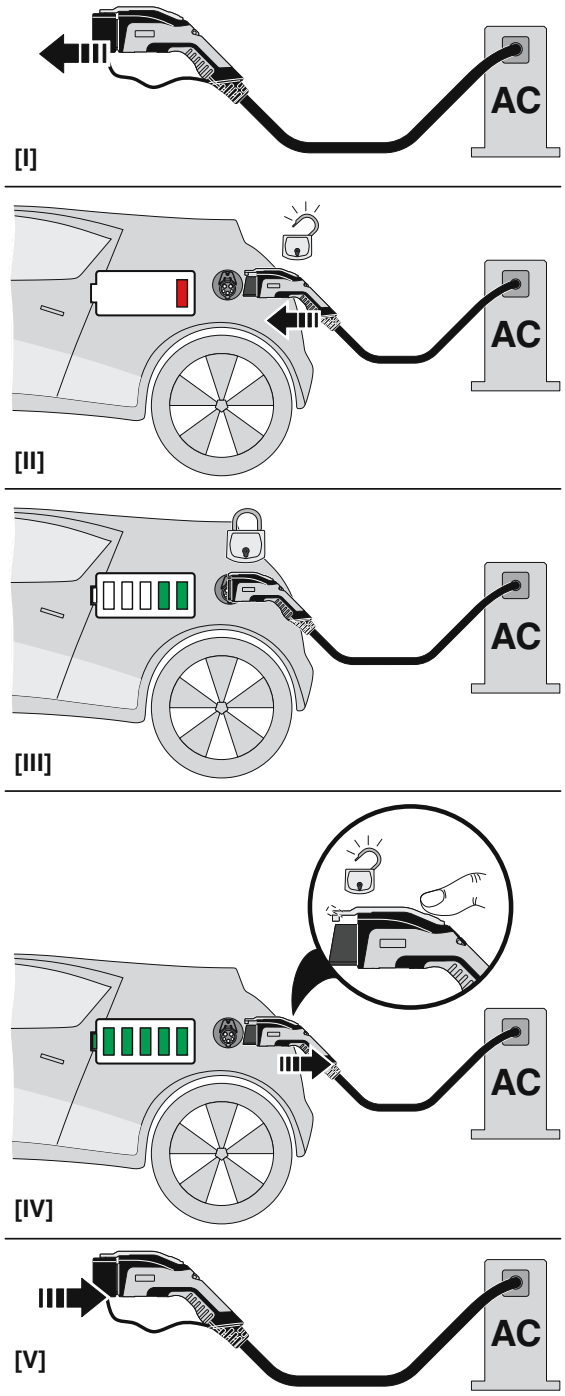

Vehicle charging inlet - CHARX T1HCI12-1AC48-2,0M1 - 1271960

Schematic diagram

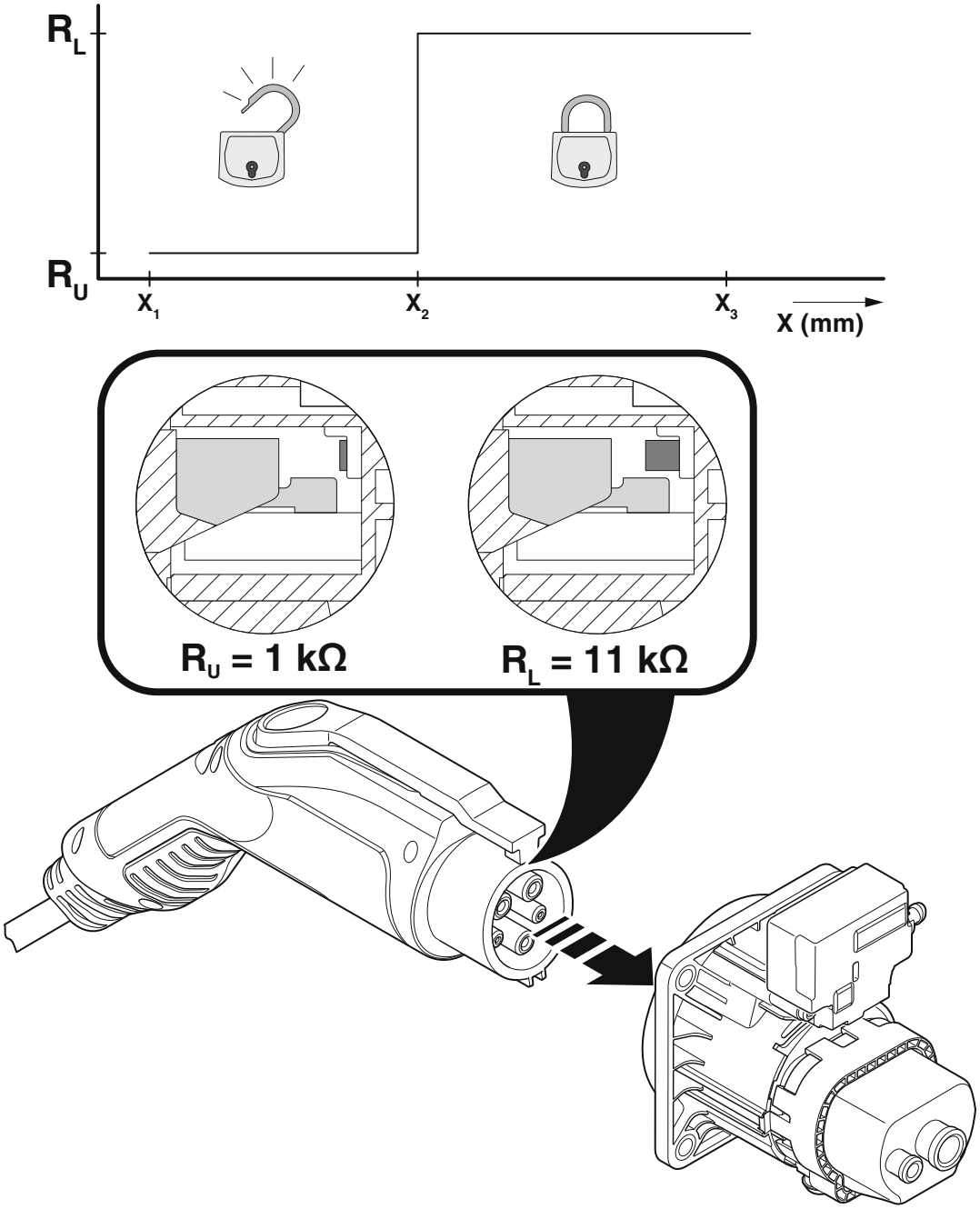

Vehicle charging inlet - CHARX T1HCI12-1AC48-2,0M1 - 1271960

Classifications

eCl@ss

eCl@ss 10.0.1	27144706
eCl@ss 11.0	27144706

ETIM

ETIM 7.0	EC002898

Phoenix Contact 2021 © - all rights reserved
http://www.phoenixcontact.com