MATERIAL NO.	ENGINEERING NO.	FINISHED LENGTH
1300130110	1R3000A20M005	1 FT 7.7 IN (0.5M)
1300130113	1R3000A20M030	9 FT 10.1 IN (3.0M)
1300130115	1R3000A20M050	16 FT 4.9 IN (5.0M)

TOLERANCE CHART

FINISH LENGTH [FT]		TOLERANCE [IN]	FINISH LENGTH [M]		TOLERANCE [mm]
OVER	UNDER		OVER	UNDER	
0.00	.167	N/A	0.0	0.05	NA
.167	.500	+.63 -0	0.05	0.15	+16 -0
.500	1.00	+.75 -0	0.15	0.3	+19 -0
1.00	3.00	+1.75 -0	0.3	0.9	+44.5 -0
3.00	6.00	+2.19 -0	0.9	1.8	+55.6 -0
6.00	12.00	+3.50 -0	1.8	3.7	+88.8 -0
12.00	24.00	+6.50 -0	3.7	7.3	+165.1 -0
24.00	48.00	+12.50 -0	7.3	21.9	+317.5 -0
48.00	96.00	+24.50 -0	21.9	29.3	+622.3 -0
96.00	~	+2.00% -0	29.3	~	+2% OF FIN LGTH

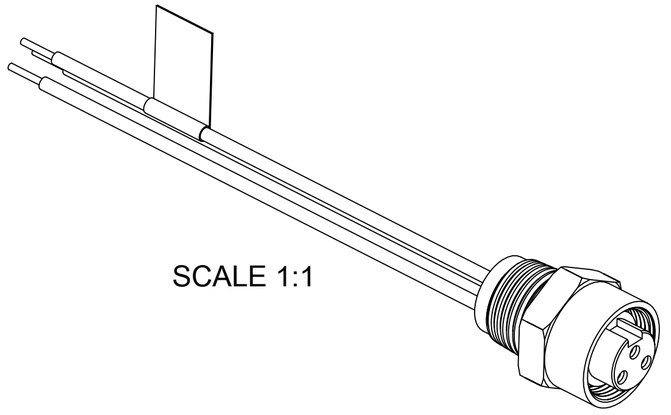

SCALE 1:1

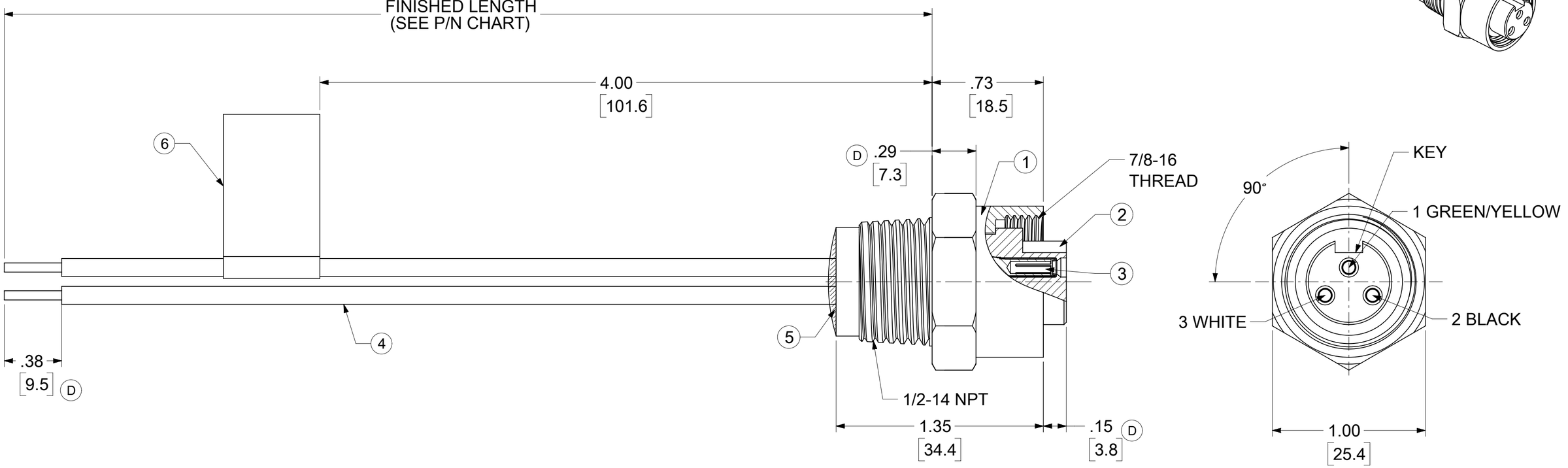

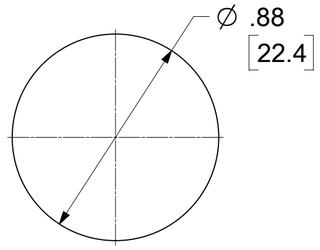

REF. KNOCKOUT HOLE

NOTES:
1. MATERIAL: AS NOTED
2. FINISH: AS NOTED
3. ELECTRICAL:
   VOLTAGE: 500V PER IEC60664
   600V PER UL2238
   CURRENT: 13A
4. TEMP RATING: -20°C TO +105°C
5. PROTECTION: IP67 (WHEN MATED)
6. UL RECOGNIZED FILE: E152210 (D)
   CSA CERTIFIED FILE: LR6837
7. ALL DIMS ARE FOR REFERENCE UNLESS TOLERANCED OR NOTED OTHERWISE

PART NO. MATRIX
1R3000A20M005

FINISHED LENGTH
M005 = 0.5 METER
M010 = 1.0 METER
M100 = 10.0 METERS

ITEM	DESCRIPTION	MATERIAL	FINISH	
6	FLAG LABEL	VINYL	BLACK/YELLOW	
5	POTTING MATERIAL	EPOXY		
4	WIRE #16 (UL 1015)	PVC INSULATION	SEE FACE VIEW	
3	CONTACT SOCKET & SLLEVE ASSY.	Cu ALLOY	GOLD PLATED	
2	INSERT	TPE	YELLOW	(D)
1	RECEPTACLE SHELL	ZINC (DIE-CAST)	NICKEL PLATED	

DOCUMENT STATUS: P1 | RELEASE DATE: 2020/07/27 17:35:25

THIS DRAWING CONTAINS INFORMATION THAT IS PROPRIETARY TO MOLEX ELECTRONIC TECHNOLOGIES, LLC AND SHOULD NOT BE USED WITHOUT WRITTEN PERMISSION

DIMENSION UNITS: INCH/MM | SCALE: 2:1

GENERAL TOLERANCES (UNLESS SPECIFIED)
ANGULAR TOL ± 0.5°
4 PLACES ±
3 PLACES ±
2 PLACES ± 0.13
1 PLACE ± 0.3
0 PLACES ±

DRAFT WHERE APPLICABLE MUST REMAIN WITHIN DIMENSIONS

CURRENT REV DESC: ITEM 2 WAS PVC, MATERIAL TAB, UL & TOLERANCE CHART MODIFIED. DIMS & CSA ADDED.

EC NO: 641453
DRWN: PDODDAMANEMY 2020/03/31
CHK'D: RSTONE 2020/07/20
APPR: BWOODMAN 2020/07/27

INITIAL REVISION:
DRWN: RSTONE 2009/08/26
APPR: JFMURPHY 2009/08/27

THIRD ANGLE PROJECTION | DRAWING: C-SIZE | SERIES: 130013

molex

MINI-CHANGE RECEPTACLE, A SIZE
3P, FEMALE, STRAIGHT, SINGLE KEY, 16 AWG

PRODUCT CUSTOMER DRAWING

DOCUMENT NUMBER	DOC TYPE	DOC PART	REVISION
SD-130013-085	PSD	001	D

MATERIAL NUMBER	CUSTOMER	SHEET NUMBER
SEE TABLE	GENERAL MARKET	1 OF 1

FORMAT: master-tb-prod-C
REVISION: J
DATE: 2020/01/14