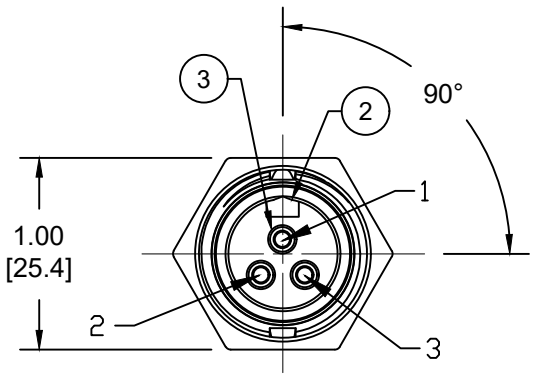

MALE INSERT - FRONT VIEW

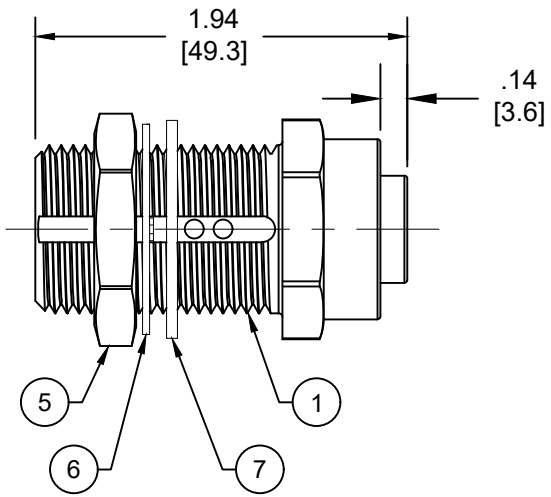

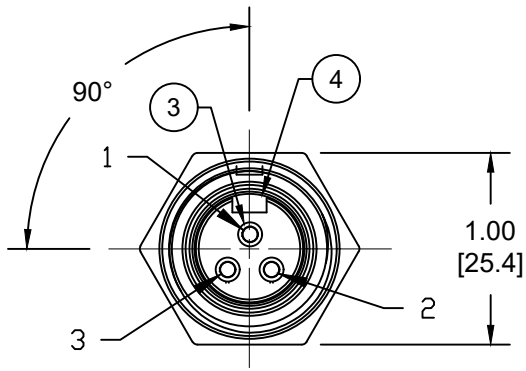

FEMALE INSERT - FRONT VIEW

NOTES:

1. MATERIAL: AS NOTED
2. FINISH: AS NOTED
3. ELECTRICAL:
   VOLTAGE: 600V
   CURRENT: 13A
4. TEMP RATING: -20°TO +60°C
5. PROTECTION: IP67 (WHEN MATED)
6. COUPLING THREAD: 7/8-16UN
7. UL RECOGNIZED FILE: E152210
   CSA CERTIFIED FILE: LR6837 (B)
8. ALL DIMENSIONS ARE FOR REFERENCE
   UNLESS TOLERANCED OR NOTED OTHERWISE

MATERIAL NO.	ENGINEERING NO.
1300130255	1R3030

7	GASKET	NEOPRENE	BLACK	
6	THRUST WASHER	NYLON		
5	LOCKNUT	BRASS	NICKEL OVER COPPER	
4	FEMALE INSERT	TPC	YELLOW	(B)
3	PIN/SOCKET CONTACT	COPPER ALLOY	GOLD/NICKEL PLATED	
2	MALE INSERT	TPE	YELLOW	(B)
1	RECEPTACLE SHELL	BRASS	NICKEL OVER COPPER	
ITEM	DESCRIPTION	MATERIAL	FINISH	

DOCUMENT STATUS	P1	RELEASE DATE	2021/07/14 21:16:15

THIS DRAWING CONTAINS INFORMATION THAT IS PROPRIETARY TO MOLEX ELECTRONIC TECHNOLOGIES, LLC AND SHOULD NOT BE USED WITHOUT WRITTEN PERMISSION

FUNCTIONAL SYMBOLS
FA=0
FC=0
FP=0
DIVISIONAL SYMBOLS

DIMENSION UNITS: INCH/MM
SCALE: NTS

GENERAL TOLERANCES (UNLESS SPECIFIED)

	mm	INCH
4 PLACES	±----	±----
3 PLACES	±----	±----
2 PLACES	±----	±----
1 PLACE	±----	±----
0 PLACES	±----	±----
ANGULAR TOL ±	---- °	

DRAFT WHERE APPLICABLE MUST REMAIN WITHIN DIMENSIONS

CURRENT REV DESC: ITEM #2 WAS PVC. ITEM #4 WAS TPE. ADDED UL & CSA IN NOTES.

EC NO: 669893

DRWN:	ABENJAMINLW	2021/04/09
CHK'D:	RSTONE	2021/07/12
APPR:	BWOODMAN	2021/07/14

INITIAL REVISION:

DRWN:	BWOODMAN	2009/07/28
APPR:	JFMURPHY	2009/08/10

THIRD ANGLE PROJECTION

molex

MINI-CHANGE RECEPTACLE, A-SIZE
3 POLE, MALE - FEMALE, PASS-THRU

PRODUCT CUSTOMER DRAWING

DRAWING	SERIES	MATERIAL NUMBER	CUSTOMER	SHEET NUMBER
A-SIZE	130013	SEE CHART	GENERAL MARKET	1 OF 1

DOCUMENT NUMBER	DOC TYPE	DOC PART	REVISION
SD-130013-011	PSD	001	B

FORMAT: IN-ACAD-tb-prod-A
REVISION: B
DATE: 2020/01/14