MATERIAL NO.	ENGINEERING NO.	FINISHED LENGTH
1300130396	1R4D06A16A120	12IN [1FT]

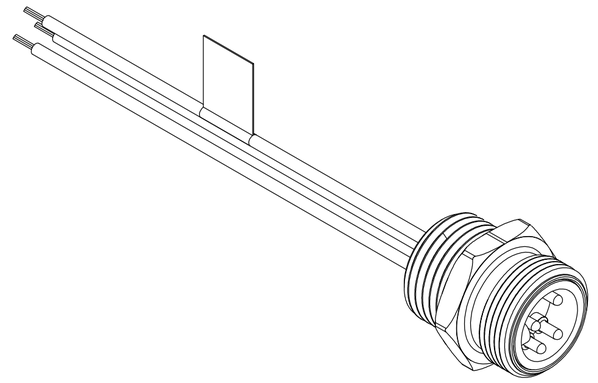

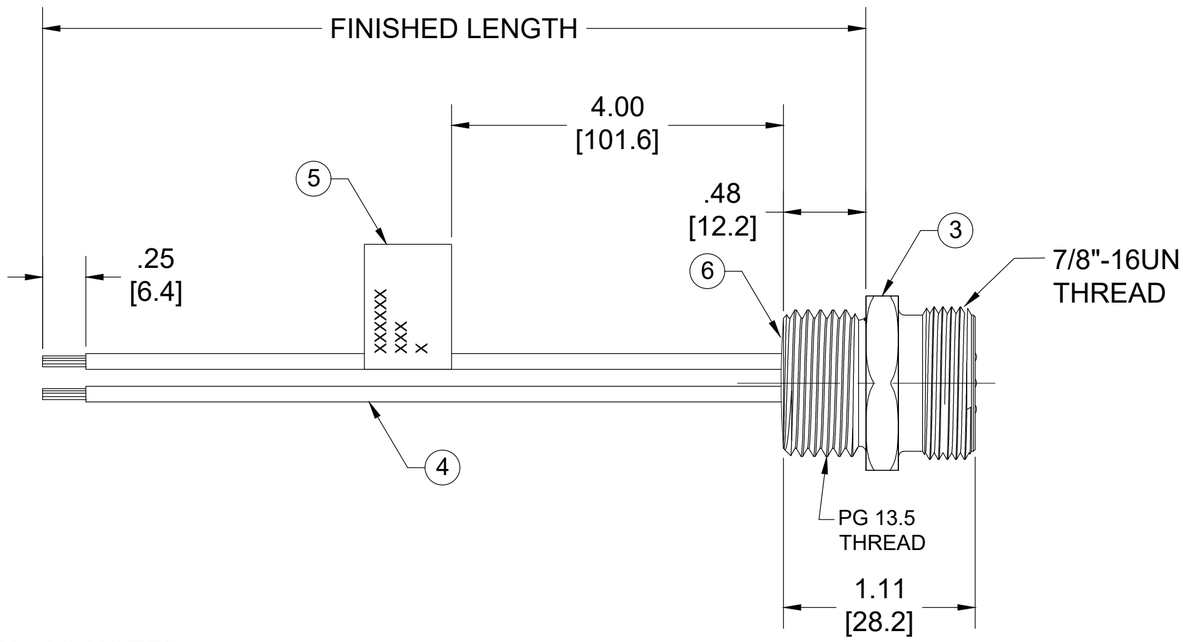

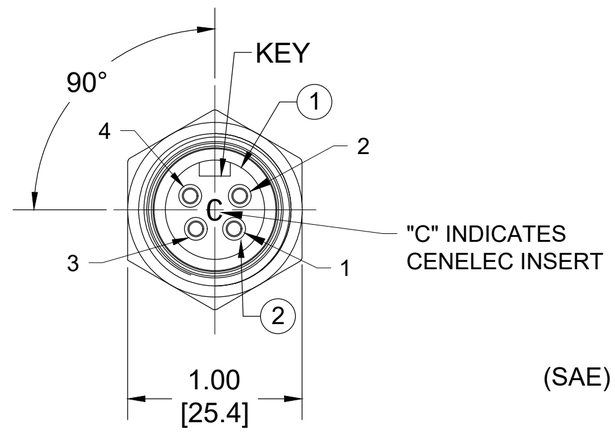

MALE FACE VIEW
(CENELEC)

	(SAE)	CENELEC	
(1)	4	BLACK	
(2)	3	BLUE	
(3)	1	BROWN	
(4)	2	WHITE	

WIRING DIAGRAM

NOTES:

1. MATERIAL: AS NOTED
2. FINISH: AS NOTED
3. ELECTRICAL:
   VOLTAGE: 483 PER IEC60664
   600 PER UL2238
   CURRENT: 5.6A
4. TEMP RATING: -20° TO +105°C
5. PROTECTION: IP67 (WHEN MATED)
6. COUPLING THREAD- AS NOTED
7. CSA CERTIFIED FILE: LR6837
8. ALL DIMENSIONS ARE FOR REFERENCE UNLESS TOLERANCED OR NOTED OTHERWISE

PART NUMBER LEGEND

1R4D06A16A120

LENGTH
A120= 12 IN.
F020= 2 FEET
F100= 10 FEET

M005= 0.5 METER
M010= 1 METER
M100= 10 METER

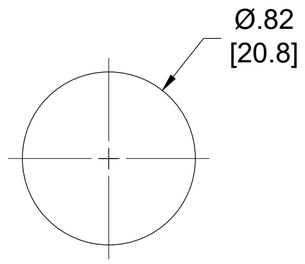

KNOCKOUT HOLE

CABLE LENGTH TOLERANCES
<.3M [1FT]: +19mm-0 [+.75in-0]
.3 - .9M [1 - 3FT]: +44.5mm-0 [+1.75in-0]
.9 - 1.8M [3 - 6FT]: +55.6mm-0 [+2.19in-0]
1.8 - 3.7M [6 - 12FT: +88.9mm-0 [+3.50in-0]
3.7 - 7.3M [12 - 24FT]: +165.1mm-0 [+6.50in-0]
7.3-14.6M [24 - 48FT]: +317.5mm-0 [+12.50in-0]
14.6 - 30.5M [48-100FT]: +622.3mm-0 [+24.50in-0]
OVER 30M [100FT] +2% OF FINISHED LENGTH

ITEM	COMPONENT	MATERIAL	FINISH
6	POTTING MATERIAL	RESIN	BLACK
5	FLAG LABEL	VINYL	BLACK/YELLOW
4	CABLE - 18 AWG	PVC	SEE WIRING DIAGRAM
3	RECEPTACLE SHELL	ALUMINUM	CLEAR ANODIZE
2	CONTACT PIN	COPPER ALLOY	GOLD PLATED
1	INSERT	TPE	YELLOW

THIS DRAWING CONTAINS INFORMATION THAT IS PROPRIETARY TO MOLEX ELECTRONIC TECHNOLOGIES, LLC AND SHOULD NOT BE USED WITHOUT WRITTEN PERMISSION

DIMENSION UNITS: INCH/MM | SCALE: NTS

GENERAL TOLERANCES (UNLESS SPECIFIED)

	mm	INCH
4 PLACES	±----	±----
3 PLACES	±----	±----
2 PLACES	±----	±0.01
1 PLACE	±0.3	±----
0 PLACES	±----	±----
ANGULAR TOL ±	---- °	

DRAFT WHERE APPLICABLE MUST REMAIN WITHIN DIMENSIONS

CURRENT REV DESC: REMOVED OBSOLETED PART NUMBERS AS PER PCN #517104

EC NO: 836953
DRWN: PRANAA 2025/10/13
CHK'D: GGA 2025/10/16
APPR: GGA 2025/10/16

INITIAL REVISION:
DRWN: BWOODMAN 2009/06/18
APPR: JFMURPHY 2009/07/08

molex

MINI-CHANGE RECEPTACLE, A-SIZE
4 POLE, MALE, STRAIGHT, SINGLE KEY, #18 AWG
PG13.5 IEC COLOR CODE

PRODUCT CUSTOMER DRAWING

DOCUMENT NUMBER	DOC TYPE	DOC PART	REVISION
SD-130013-006	PSD	001	B1

THIRD ANGLE PROJECTION | DRAWING: C-SIZE | SERIES: 130013 | MATERIAL NUMBER: SEE CHART | CUSTOMER: GENERAL MARKET | SHEET NUMBER: 1 OF 1

DOCUMENT STATUS	P1	RELEASE DATE	2025/10/16 19:09:27

FORMAT: IN-ACAD-tb-prod-C
REVISION: C
DATE: 2022/10/04