MATERIAL NUMBER	OLD PART NUMBER	FINISH LENGTH
130013-0403	1R4G04A20A1201	1.0'+.75"-0 [.3M+19.1-0]

VOLTAGE RATTING	600 VAC/VDC
AMPERAGE RATTING	10A
PROJECTION	IP67
OPERATING TEMPERATURE	-20° C TO 105° C
UL CERTIFICATIONS	UL RECOGNIZED, FILE NO. E152210
CSA CERTIFICATIONS	CSA CERTIFIED, FILE NO. LR6837

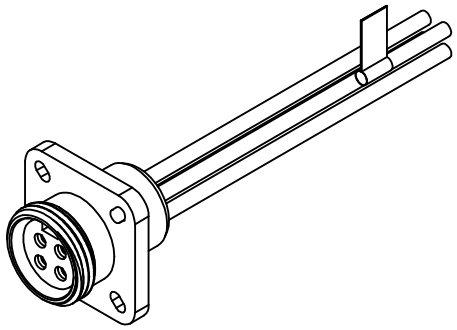

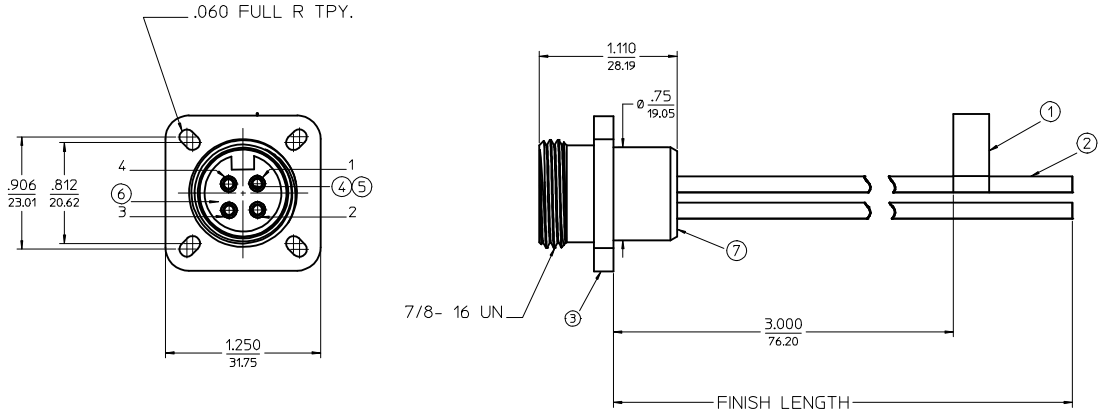

ITEM.	QTY.	COMPONENT	MATERIAL	FINISH
1	1	FLAG LABEL	PLASTIC FILM	BLACK/YELLOW
2	4	CONDUCTOR-16 AWG, 26X#30 COPPER STRANDING 600V	PVC	SEE WIRING DIAGRAM
3	1	RECEPTACLE SHELL	STAINLESS STEEL	PASSIVATED
4	4	SOCKET SLEEVE	STAINLESS STEEL	
5	4	CONTACT SOCKET	COPPER ALLOY	GOLD PLATED
6	1	INSERT	PVC	YELLOW
7	1	POTTING	EPOXY	BLACK

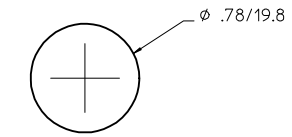

WIRING DIAGRAM

1 BLACK
2 WHITE
3 RED
4 GREEN-YELLOW

RELEASED
EC NO: WNA2010-0010 2009/07/02
DRWN:SGARCIA
CHKD&:WOODMAN
APPR:JFMURPHY 2009/07/08
DESCRIPTION
A
REV

QUALITY SYMBOLS
▼=0
▽=0

GENERAL TOLERANCES (UNLESS SPECIFIED)

	mm	INCH
4 PLACES	± ---	± ---
3 PLACES	± ---	± .005
2 PLACES	± 0.13	± .010
1 PLACE	± 0.25	± ---
ANGULAR ±1/2°		

DRAFT WHERE APPLICABLE MUST REMAIN WITHIN DIMENSIONS

DIMENSION STYLE: IN/MM
SCALE: 2:1
DESIGN UNITS: INCH
THIRD ANGLE PROJECTION

DRAWN BY: S.GARCIA DATE: 2009/07/02
CHECKED BY: B.WOODMAN DATE: 2009/07/02
APPROVED BY: JFMURPHY DATE:
MATERIAL NO.: SEE CHART

TITLE: FR RECEPTACLE

molex MOLEX INCORPORATED

DOCUMENT NO.: SD-130013-009
SHEET NO.: 1 OF 1

SIZE: D

THIS DRAWING CONTAINS INFORMATION THAT IS PROPRIETARY TO MOLEX INCORPORATED AND SHOULD NOT BE USED WITHOUT WRITTEN PERMISSION

MATERIAL NUMBER	OLD PART NUMBER	FINISH LENGTH
130013-0403	1R4G04A20A1201	1.0'+.75"-0 [.3M+19.1-0]

VOLTAGE RATTING	600 VAC/VDC
AMPERAGE RATTING	10A
PROJECTION	IP67
OPERATING TEMPERATURE	-20° C TO 105° C
UL CERTIFICATIONS	UL RECOGNIZED, FILE NO. E152210
CSA CERTIFICATIONS	CSA CERTIFIED, FILE NO. LR6837

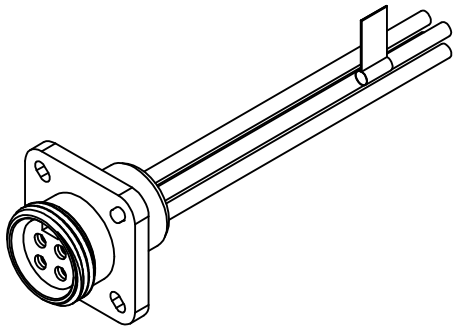

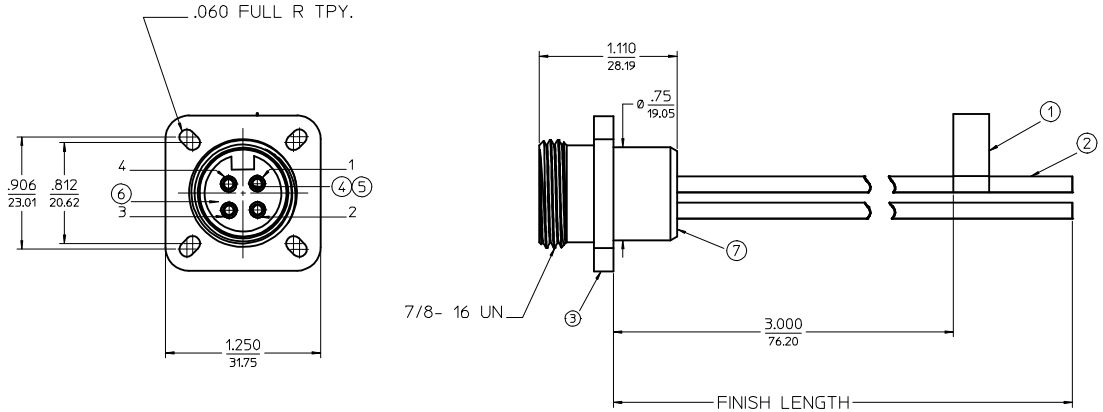

ITEM.	QTY.	COMPONENT	MATERIAL	FINISH
1	1	FLAG LABEL	PLASTIC FILM	BLACK/YELLOW
2	4	CONDUCTOR-16 AWG, 26X#30 COPPER STRANDING 600V	PVC	SEE WIRING DIAGRAM
3	1	RECEPTACLE SHELL	STAINLESS STEEL	PASSIVATED
4	4	SOCKET SLEEVE	STAINLESS STEEL	
5	4	CONTACT SOCKET	COPPER ALLOY	GOLD PLATED
6	1	INSERT	PVC	YELLOW
7	1	POTTING	EPOXY	BLACK

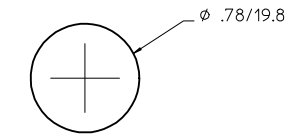

WIRING DIAGRAM

1 BLACK
2 WHITE
3 RED
4 GREEN-YELLOW

RELEASED
EC NO: WNA2010-0010 2009/07/02
DRWN:SGARCIA
CHKD&:WOODMAN
APPR:JFMURPHY 2009/07/08
DESCRIPTION
A
REV

QUALITY SYMBOLS
▼=0
▽=0

GENERAL TOLERANCES (UNLESS SPECIFIED)

	mm	INCH
4 PLACES	± ---	± ---
3 PLACES	± ---	± .005
2 PLACES	± 0.13	± .010
1 PLACE	± 0.25	± ---
ANGULAR ±1/2°		

DRAFT WHERE APPLICABLE MUST REMAIN WITHIN DIMENSIONS

DIMENSION STYLE: IN/MM
SCALE: 2:1
DESIGN UNITS: INCH
THIRD ANGLE PROJECTION

DRAWN BY: S.GARCIA DATE: 2009/07/02
CHECKED BY: B.WOODMAN DATE: 2009/07/02
APPROVED BY: JFMURPHY DATE:
MATERIAL NO.: SEE CHART

TITLE: FR RECEPTACLE

molex MOLEX INCORPORATED

DOCUMENT NO.: SD-130013-009
SHEET NO.: 1 OF 1

SIZE: D

THIS DRAWING CONTAINS INFORMATION THAT IS PROPRIETARY TO MOLEX INCORPORATED AND SHOULD NOT BE USED WITHOUT WRITTEN PERMISSION