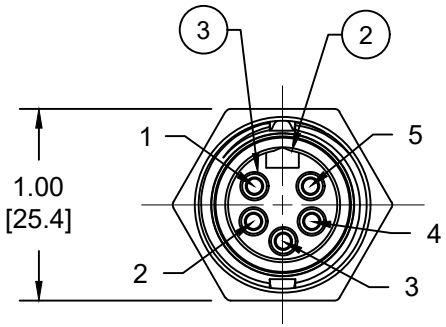

MALE INSERT - FRONT VIEW

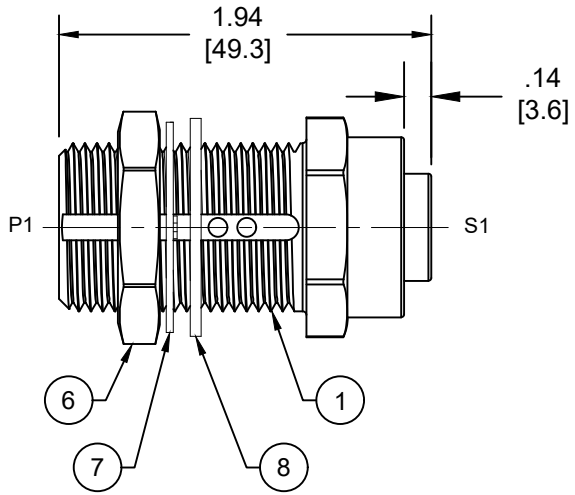

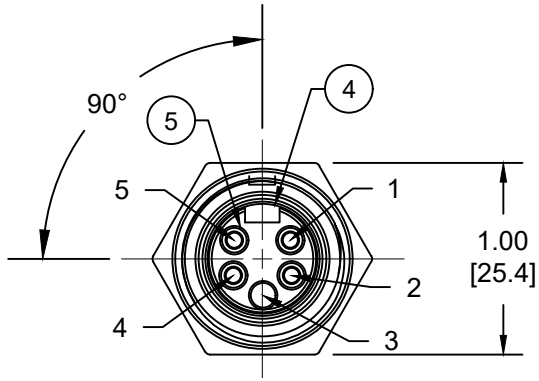

FEMALE INSERT - FRONT VIEW

NOTES:

1. MATERIAL: AS NOTED
2. FINISH: AS NOTED
3. ELECTRICAL:
   VOLTAGE: 400 PER IEC60664 (C)
   600V PER UL2238
   CURRENT: 8A
4. TEMP RATING: -20°TO +60°C
5. PROTECTION: IP67 (WHEN MATED)
6. COUPLING THREAD: 7/8-16UN
7. CSA CERTIFIED FILE: LR6837
8. ALL DIMENSIONS ARE FOR REFERENCE
   UNLESS TOLERANCED OR NOTED OTHERWISE

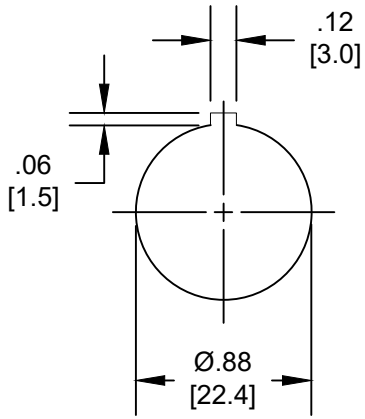

TYPICAL KNOCKOUT

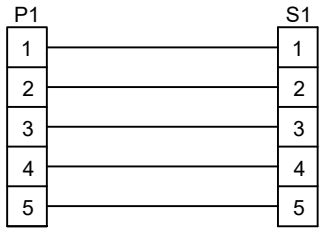

WIRING DIAGRAM

MATERIAL NO.	ENGINEERING NO.
1300130541	1R5030

ITEM	DESCRIPTION	MATERIAL	FINISH	
8	GASKET	NEOPRENE	BLACK	
7	THRUST WASHER	NYLON	WHITE	
6	LOCKNUT	BRASS	NICKEL PLATED	
5	SOCKET CONTACT	COPPER ALLOY	GOLD OVER NICKEL	
4	FEMALE INSERT	TPC	GRAY	(C)
3	PIN CONTACT	COPPER ALLOY	GOLD OVER NICKEL	
2	MALE INSERT	TPC	GRAY	(C)
1	RECEPTACLE SHELL	BRASS	NICKEL PLATED	

DOCUMENT STATUS	P1	RELEASE DATE	2022/03/26 00:25:03

THIS DRAWING CONTAINS INFORMATION THAT IS PROPRIETARY TO MOLEX ELECTRONIC TECHNOLOGIES, LLC AND SHOULD NOT BE USED WITHOUT WRITTEN PERMISSION

FUNCTIONAL SYMBOLS: FA=0, FC=0, FP=0
DIVISIONAL SYMBOLS

DIMENSION UNITS: INCH/MM
SCALE: NTS

GENERAL TOLERANCES (UNLESS SPECIFIED)

	mm	INCH
4 PLACES	±----	±----
3 PLACES	±----	±----
2 PLACES	±----	±----
1 PLACE	±----	±----
0 PLACES	±----	±----
ANGULAR TOL ±	---- °	

DRAFT WHERE APPLICABLE MUST REMAIN WITHIN DIMENSIONS

CURRENT REV DESC: ITEM #2 WAS PVC. ITEM #4 WAS TPE.

EC NO: 698297

DRWN:	ABENJAMINLW	2021/05/31
CHK'D:	RSTONE	2022/03/16
APPR:	BWOODMAN	2022/03/26

INITIAL REVISION:

DRWN:	BWOODMAN	2009/07/28
APPR:	JFMURPHY	2009/08/10

THIRD ANGLE PROJECTION | DRAWING: A-SIZE | SERIES: 130013

molex

MINI-CHANGE RECEPTACLE, A-SIZE
5 POLE, MALE - FEMALE, PASS-THRU

PRODUCT CUSTOMER DRAWING

DOCUMENT NUMBER	DOC TYPE	DOC PART	REVISION
SD-130013-012	PSD	001	C

MATERIAL NUMBER	CUSTOMER	SHEET NUMBER
SEE CHART	GENERAL MARKET	1 OF 1

FORMAT: IN-ACAD-tb-prod-A
REVISION: B
DATE: 2020/01/14