MATERIAL NUMBER	OLD PART NUMBER	FINISH LENGTH
130013-0550	1R5G04A20A120	1.0'+.75"-0 [.3M+19.1-0]

VOLTAGE RATTING	600 VAC/VDC
AMPERAGE RATING	8A
PROJECTION	IP67
OPERATING TEMPERATURE	-20° C TO 105° C
UL CERTIFICATIONS	UL RECOGNIZED, FILE NO. E152210
CSA CERTIFICATIONS	CSA CERTIFIED, FILE NO. LR6837

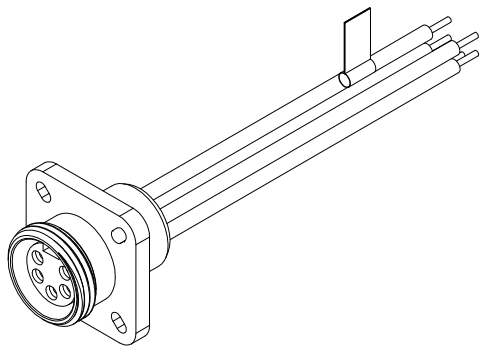

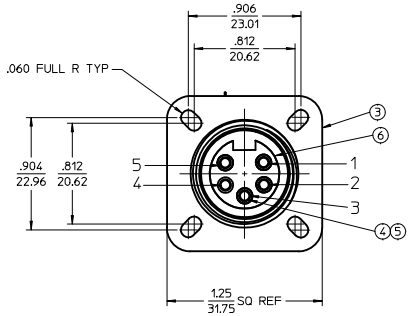

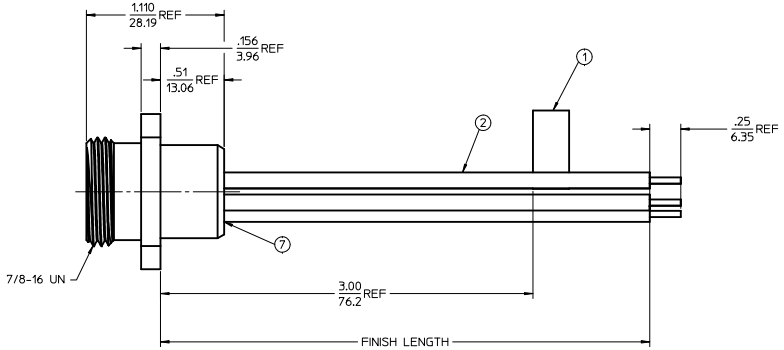

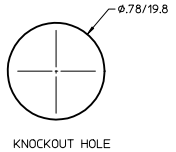

WIRING DIAGRAM

1> WHITE
2> RED
3> GREEN/YELLOW-GND
4> ORANGE
5> BLACK

ITEM.	QTY.	COMPONENT	MATERIAL	FINISH
1	1	FLAG LABEL	PLASTIC FILM	BLACK/YELLOW
2	5	CONDUCTOR-16 AWG, 26X#30 COPPER STRANDING 600V	PVC	SEE WIRING DIAGRAM
3	1	RECEPTACLE SHELL	ALUMINUM	ANODIZED
4	5	SOCKET SLEEVE	STAINLESS STEEL	
5	5	CONTACT SOCKET	COPPER ALLOY	GOLD PLATED
6	1	5 POLE INSERT	PVC	YELLOW
7	1	POTTING	EPOXY	BLACK

CREATE DOC
EC NO: WNA2010-0423 2010/01/08
DRWN:BRUPERT 2010/01/14
CHKD:B.WOODMAN 2010/01/14
APPR:JFMURPHY 2010/01/14
DESCRIPTION
REV A

QUALITY SYMBOLS
▼=0
▽=0

GENERAL TOLERANCES (UNLESS SPECIFIED)

	mm	INCH
4 PLACES	± ---	± ---
3 PLACES	± ---	± .005
2 PLACES	± 0.013	± ---
1 PLACE	± ---	± ---
ANGULAR ±1/2°		

DRAFT WHERE APPLICABLE MUST REMAIN WITHIN DIMENSIONS

DIMENSION STYLE: IN/MM
SCALE: 2:1
DESIGN UNITS: INCH
THIRD ANGLE PROJECTION

DRAWN BY: B.RUPERT DATE: 01/07/2010
CHECKED BY: B.WOODMAN DATE: 01/07/2010
APPROVED BY: JFMURPHY DATE: 2010/01/14

TITLE: FEMALE FLANGED RECEP. MINI-CHANGE 5P 16AWG PVC

MOLEX INCORPORATED

MATERIAL NO.: SEE CHART
DOCUMENT NO.: SD-130013-018
SHEET NO.: 1 OF 1
SIZE: D

THIS DRAWING CONTAINS INFORMATION THAT IS PROPRIETARY TO MOLEX INCORPORATED AND SHOULD NOT BE USED WITHOUT WRITTEN PERMISSION