FACE VIEW-FEMALE INSERT		
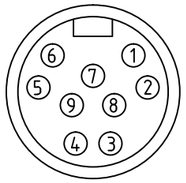	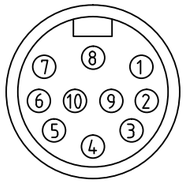	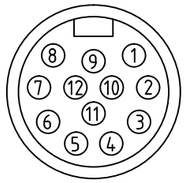
1 ORANGE 2 BLUE 3 RED/BLACK 4 GREEN/BLACK 5 WHITE 6 RED 7 GREEN/YELLOW 8 WHITE/BLACK 9 BLACK	1 ORANGE 2 BLUE 3 WHITE/BLACK 4 RED/BLACK 5 GREEN/BLACK 6 ORANGE/BLACK 7 RED 8 GREEN/YELLOW 9 BLACK 10 WHITE	1 ORANGE 2 BLUE 3 WHITE/BLACK 4 RED/BLACK 5 GREEN/BLACK 6 ORANGE/BLACK 7 BLUE/BLACK 8 BLACK/WHITE 9 GREEN/YELLOW 10 RED 11 WHITE 12 BLACK

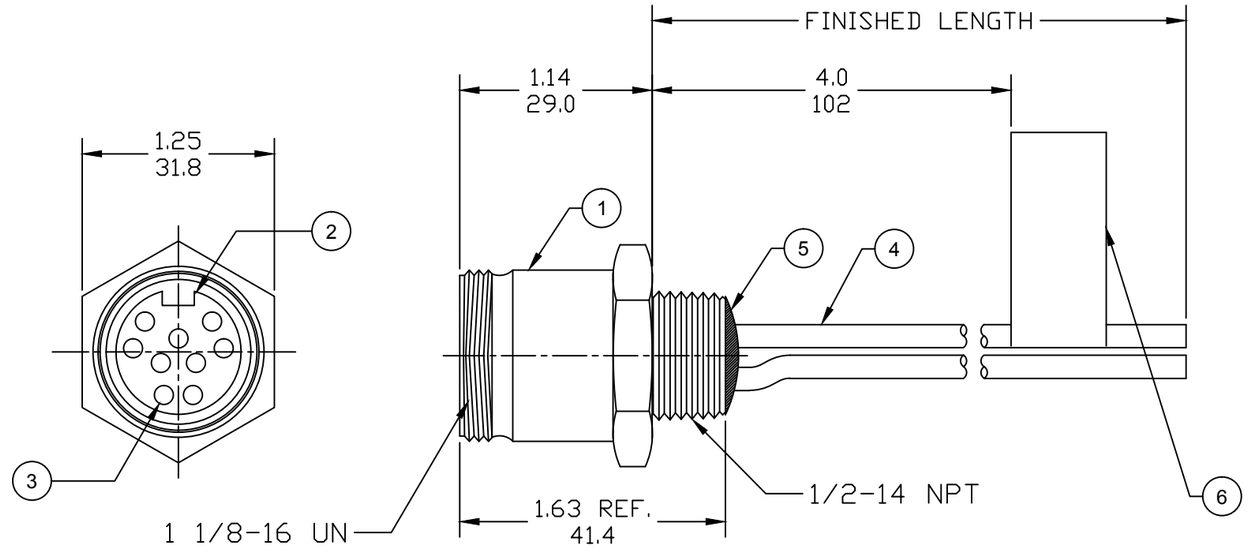

B1 CHART

PART NO.	ENGINEERING NO.	FINISHED LENGTH
1300150117	3R9004A20A120	12IN
1300150029	3R1004A20F020	2.0FT
1300150070	3R2004A20M005	0.5M

NOTES:
1. MATERIAL: AS NOTED
2. FINISH: AS NOTED
3. ELECTRICAL:
   B1 VOLTAGE: 320V PER IEC60664
   600V PER UL2238
   CURRENT: 9 POLE: 7A
   10 POLE: 7A
   12 POLE: 5A
4. TEMP RATING: -20°TO +105°C
5. PROTECTION: IP67 (WHEN MATED)
B1 6. UL RECOGNIZED, FILE: E152210
7. DIMS ARE FOR REFERENCE
   UNLESS OTHERWISE NOTED

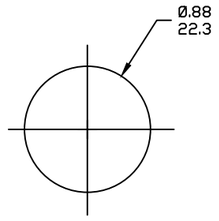

B1 REF. KNOCKOUT HOLE

PART NUMBER LEGEND

3R1004A20F0101

POLES
9= 9 POLES
1=10 POLES
2=12 POLES

LENGTH:
A120= 12 INCHES
F001= .1 FT
F020= 2 FT
F200= 20 FT
M005= 0.5 METER
M010= 1 METER
M100= 10 METER

COUPLING: BLANK= STD (SEE BOM)
1= 303 STAINLESS ST.

B1 CABLE LENGTH TOLERANCES
>.3M [1FT]: +19mm-0 [+.75in-0]
.3 - .9M [1 - 3FT]: +44.5mm-0 [+1.75in-0]
.9 - 1.8M [3 - 6FT]: +55.6mm-0 [+2.19in-0]
1.8 - 3.7M [6 - 12FT: +88.9mm-0 [+3.50in-0]
3.7 - 7.3M [12 - 24FT]: +165.1mm-0 [+6.50in-0]
7.3-14.6M [24 - 48FT]: +317.5mm-0 [+12.50in-0]
14.6 - 30.5M [48-100FT]: +622.3mm-0 [+24.50in-0]
OVER 30M [100FT] +2% OF FINISHED LENGTH

ITEM	DESCRIPTION	MATERIAL	FINISH
6	FLAG LABEL	VINYL	BLACK/YELLOW
5	POTTING MATERIAL	EPOXY	
4	WIRE, 16 AWG UL (1015)	PVC INSULATION	SEE CHART
3	CONTACT SOCKET	COPPER ALLOY	GOLD PLATED
2	FEMALE INSERT (C-SIZE)	PVC	YELLOW
1	RECEPTACLE SHELL	ZINC DIE-CAST	BLACK

REVD IEC VOLTS, ADD UL FILE, CHART & TOLS 5/1/17
EC NO: IPG2017-1018 2017/05/08
DRWN: RSTONE 2016/08/19
CH'KD: M ZIELIN
APPR: BWOODMAN
DESCRIPTION
B1
REV

QUALITY SYMBOLS
▼=0
Ⓒ=0

GENERAL TOLERANCES (UNLESS SPECIFIED)

	mm	INCH
4 PLACES	±---	±---
3 PLACES	±---	±---
2 PLACES	±---	±---
1 PLACE	±---	±---
ANGULAR ±2°		

DRAFT WHERE APPLICABLE MUST REMAIN WITHIN DIMENSIONS

DIMENSION STYLE: IN/MM
SCALE: ---
DESIGN UNITS: INCH
THIRD ANGLE PROJECTION

DRAWN BY: RSTONE DATE: 2016/07/11
CHECKED BY: K COX DATE: 2016/12/15
APPROVED BY: TWOLDEGE DATE: 2016/08/19

TITLE: MINI-CHANGE RECEPTACLE 9, 10 & 12 POLE, FEMALE 16 AWG

MOLEX INCORPORATED

MATERIAL NO.: -
DOCUMENT NO.: SD-130015-026
SHEET NO.: 1 OF 1
SIZE: B

THIS DRAWING CONTAINS INFORMATION THAT IS PROPRIETARY TO MOLEX INCORPORATED AND SHOULD NOT BE USED WITHOUT WRITTEN PERMISSION