MATERIAL NUMBER	OLD PART NUMBER	COUPLING NUT MATERIAL	COUPLING NUT FINISH
1300170023	1A5000-34	BRASS	NICKEL PLATED
1300170024	1A5000-348	STAINLESS STEEL	PASSIVATED

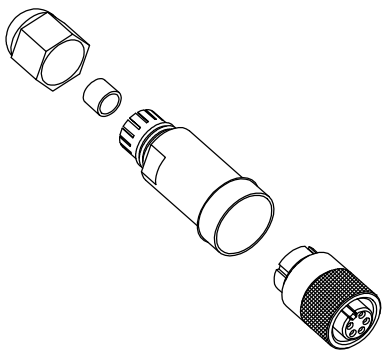

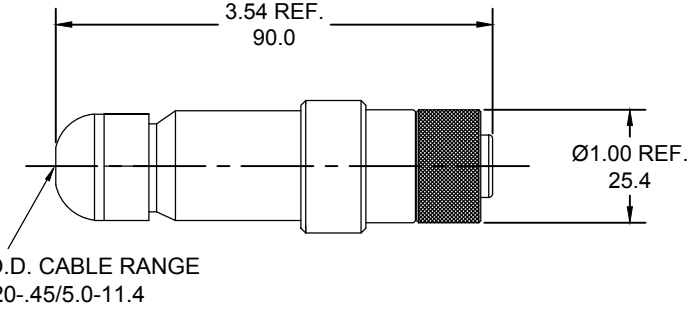

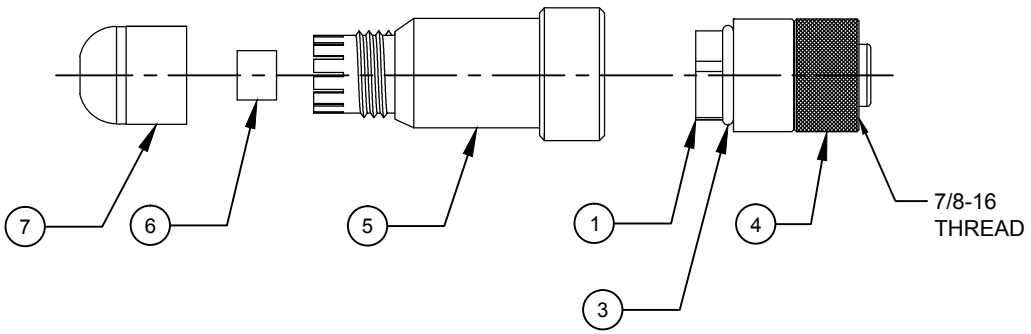

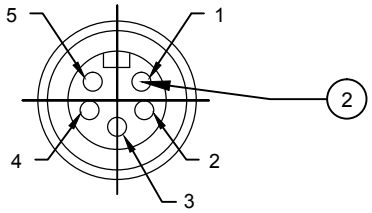

FEMALE FACE VIEW

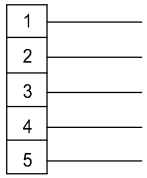

WIRING CHART

C1

VOLTAGE RATING PER UL 2238	600VAC/VDC
VOLTAGE RATING PER IEC 60664	400V
AMPERAGE RATING	8AMPS
PROTECTION	IP67 (WHEN MATED)
OPERATING TEMPERATURE	-20°C TO 80°C
CSA CERTIFICATIONS	CSA CERTIFIED, FILE NO. LR6837

ITEM	COMPONENT	MATERIAL	FINISH
1	INSERT	NYLON	BLACK
2	CONTACTS	COPPER ALLOY	GOLD PLATED
3	O-RING	NITRILE	BLACK
4	COUPLING NUT	SEE CHART	SEE CHART
5	MOLDED BODY	NYLON	BLACK
6	GROMMET	NITRILE	BLACK
7	CORD GRIP BODY	NYLON	BLACK

ADD IEC VOLTAGE RATING
EC NO: IPG2017-1018 5/1/17
DRWN: RSTONE 2017/05/01
CHKD: M ZIELIN
APPR: BWOODMAN
DESCRIPTION
REV
C1

QUALITY SYMBOLS
▼=0
C=0

GENERAL TOLERANCES (UNLESS SPECIFIED)

	mm	INCH
4 PLACES	±---	±---
3 PLACES	±---	±---
2 PLACES	±---	±---
1 PLACE	±---	±---

ANGULAR ±---°

DRAFT WHERE APPLICABLE MUST REMAIN WITHIN DIMENSIONS

DIMENSION STYLE: IN/MM
SCALE: ---
DESIGN UNITS: INCH
THIRD ANGLE PROJECTION

DRAWN BY: RSTONE DATE: 2013/05/09
CHECKED BY: BW DATE: 2013/05/14
APPROVED BY: ---- DATE: ----

TITLE: MC FIELD ATTACHABLE 5P .20-.45 OD CABLE RANGE ----

molex MOLEX INCORPORATED

MATERIAL NO.: SEE CHART
DOCUMENT NO.: SD-130017-001
SHEET NO.: 1 OF 1
SIZE: A

THIS DRAWING CONTAINS INFORMATION THAT IS PROPRIETARY TO MOLEX INCORPORATED AND SHOULD NOT BE USED WITHOUT WRITTEN PERMISSION