WIRING CHART

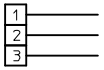

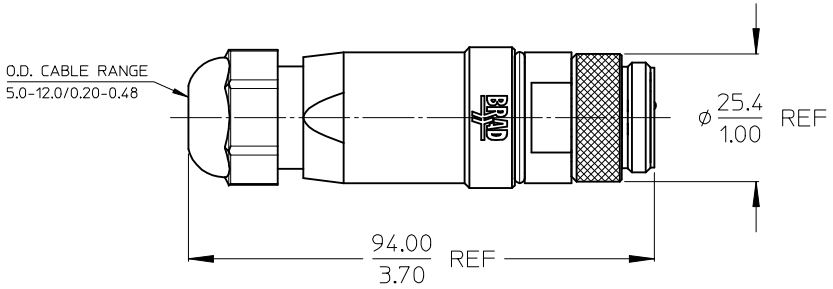

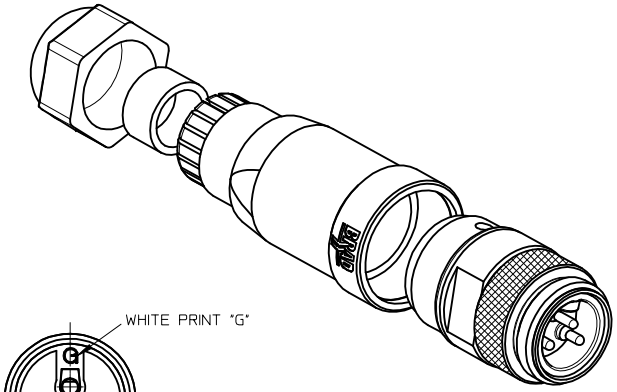

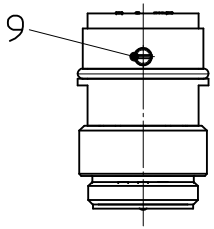

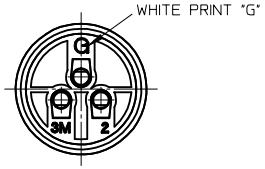

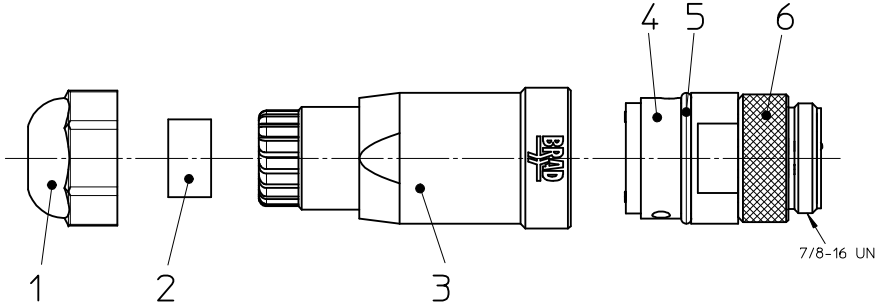

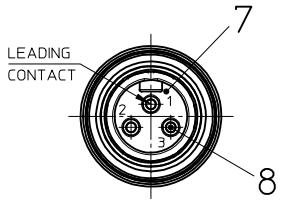

MALE FACE VIEW

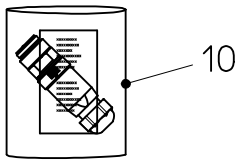

NOTES:

1. ELECTRICAL SPECIFICATIONS:

VOLTAGE RATING: 600VAC
AMPERAGE RATING: 15 AMPS
PROTECTION: IP67
OPERATING TEMPERATURE: -20°C to 80°C

2. UL CERTIFICATIONS: UL LISTED AND CULUS LISTED,
FILE NUMBER E258922

3. POLYBAG: PRINTING SEE NO.: 1300170056 1A3006-34PWR

ENG. NO.: 1A3006-34PWR

ITEM	QTY	COMPONENT	MATERIAL	FINISH
1	1	HUT NUT PG13.5	PA	BK
2	1	GASKET MO	NITRILE	BK
3	1	HOUSING FA	PA	BK
4	1	INSERT MA REAR	PA	BK
5	1	GASKET OR	NBR	BK
6	1	COUPLING NUT	BRASS	NI PLATED
7	1	INSERT MA FRONT	SANTOPRENE	BK
8	3	CONTACT MA	COPPER ALLOY	AU PLATED
9	3	SCREW M3x5	BRASS	ZN
10	1	POLYBAG 200x200x0.050	PE	-

ENTER DESCRIPTION
EC NO: IPG2013-2008 2013/07/16
DRWN:RSCHIEBER 2013/07/16
CH'KD:APOHL 2013/07/16
APPR:CBURGER 2013/07/16
DESCRIPTION
REV 2

QUALITY SYMBOLS
▼=0
Ⓒ=0

GENERAL TOLERANCES (UNLESS SPECIFIED)

	mm	INCH
4 PLACES	± ---	± ---
3 PLACES	± ---	± .005
2 PLACES	± 0.13	± .010
1 PLACE	± 0.25	± .020
0 PLACE	± ---	± ---

ANGULAR ±1/2°

DRAFT WHERE APPLICABLE MUST REMAIN WITHIN DIMENSIONS

DIMENSION STYLE: MM/IN
SCALE: 1:1
DESIGN UNITS: METRIC
THIRD ANGLE PROJECTION

DRAWN BY: RSCHIEBER DATE: 2013/04/30
CHECKED BY: APOHL DATE: 2013/05/08
APPROVED BY: CBURGER DATE: 2013/05/27

TITLE: FA MC 3P AC MA STR PG13.5 UNSH BK PA AU

molex

MATERIAL NO.: 1300170056
DOCUMENT NO.: SD-130017-014
SHEET NO.: 1 OF 1
SIZE: A3

THIS DRAWING CONTAINS INFORMATION THAT IS PROPRIETARY TO MOLEX INCORPORATED AND SHOULD NOT BE USED WITHOUT WRITTEN PERMISSION