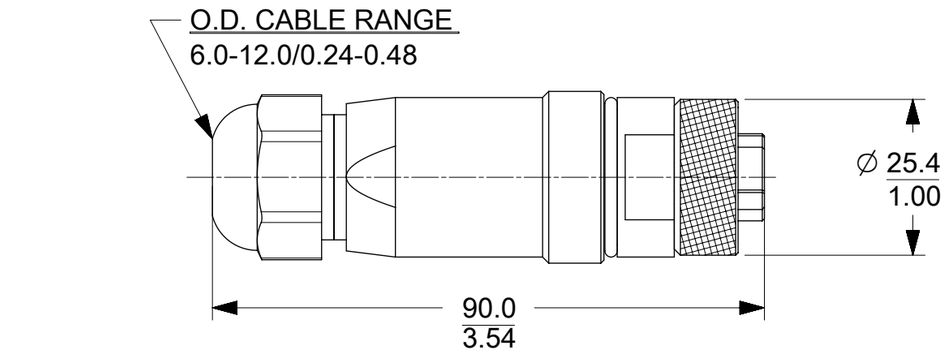

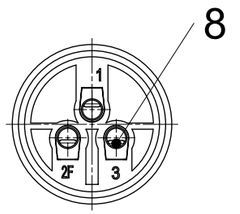

BACK SIDE
INSERT ONLY

A3

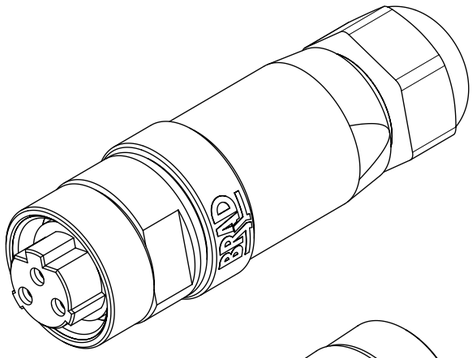

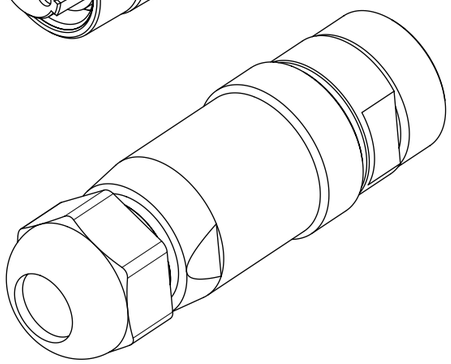

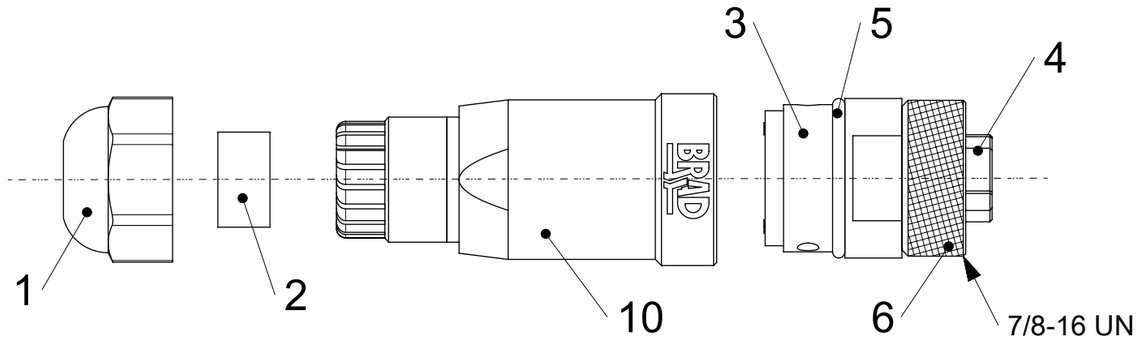

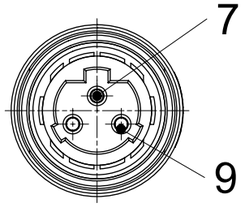

FEMALE FACE VIEW

NOTES:
1. MATERIAL: AS NOTED
2. FINISH: AS NOTED
3. ELECTRICAL:
   VOLTAGE: 500V PER IEC60664
   600V PER UL2237
   CURRENT: 15A
4. WIRE RANGE: 24 TO 14AWG
5. TEMP RATING: -20° TO +80°C
6. PROTECTION: IP67 (WHEN MATED)
7. ALL DIMS ARE FOR REFERENCE UNLESS NOTED OTHERWISE

A2

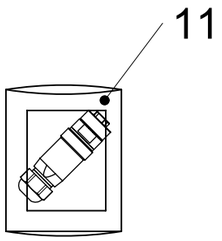

WIRING CHART

1	
2	
3	

CHART

PART NO.	ENGINEERING NO.
1300170063	1A3100-34PWR

ITEM	COMPONENT	MATERIAL	FINISH
1	HUT NUT PG 13.5	PA, BLACK	-
2	GASKET MO	NITRILE, BLACK	-
3	INSERT FE REAR	PA, BLACK	-
4	INSERT FE FRONT	SANTOPRENE, BLACK	-
5	GASKET OR	NBR, BLACK	-
6	COUPLING NUT	BRASS	Ni PLATED
7	CONTACT FE	BRASS	AU PLATED
8	SCREW M3x5	BRASS	ZN
9	SLEEVE	STAINLESS STEEL 305	-
10	HOUSING FA	PA, BLACK	-
11	POLYBAG 200x200x0.050	PE	-

RELEASE STATUS	P1	RELEASE DATE	25.10.2017 08:25:11

FORMAT: master-lib-prod-A3
REVISION: F
DATE: 2015/11/16

QUALITY SYMBOLS
FA = 0
FC = 0
FP = 0
▼ = 0
C = 0
☒ = 0
■ = 0
▽ = 0

IEC VOLTAGE WAS 400
EC NO: 167046
DRWN: RSCHIEBER 2017/09/13
CHK'D:
APPR: BBRAUCH 2017/10/25

A3 REV

THIS DRAWING CONTAINS INFORMATION THAT IS PROPRIETARY TO MOLEX ELECTRONIC TECHNOLOGIES, LLC AND SHOULD NOT BE USED WITHOUT WRITTEN PERMISSION

GENERAL TOLERANCES (UNLESS SPECIFIED)
ANGULAR TOL ± 1.0 °

4 PLACES	±
3 PLACES	±
2 PLACES	± 0.05
1 PLACE	± 0.3
0 PLACES	± 0.5

DRAFT WHERE APPLICABLE MUST REMAIN WITHIN DIMENSIONS

DIMENSION UNITS: mm
SCALE: 1:1
DRWN BY: RSCHIEBER DATE: 2016/02/01
CHK'D BY: KCOX01 DATE: 2017/03/03
APPR BY: JALEXANDER DATE: 2016/03/16
DRAWING SIZE: A3
THIRD ANGLE PROJECTION

molex

FA MC 3P OC FE STR PG13.5 UNSH BK PA AU

PRODUCT CUSTOMER DRAWING

SERIES	MATERIAL NUMBER	CUSTOMER
130017	SEE CHART	

DOCUMENT NUMBER	DOC TYPE	DOC PART	SHEET NUMBER
1300170063	PSD	000	1 OF 1