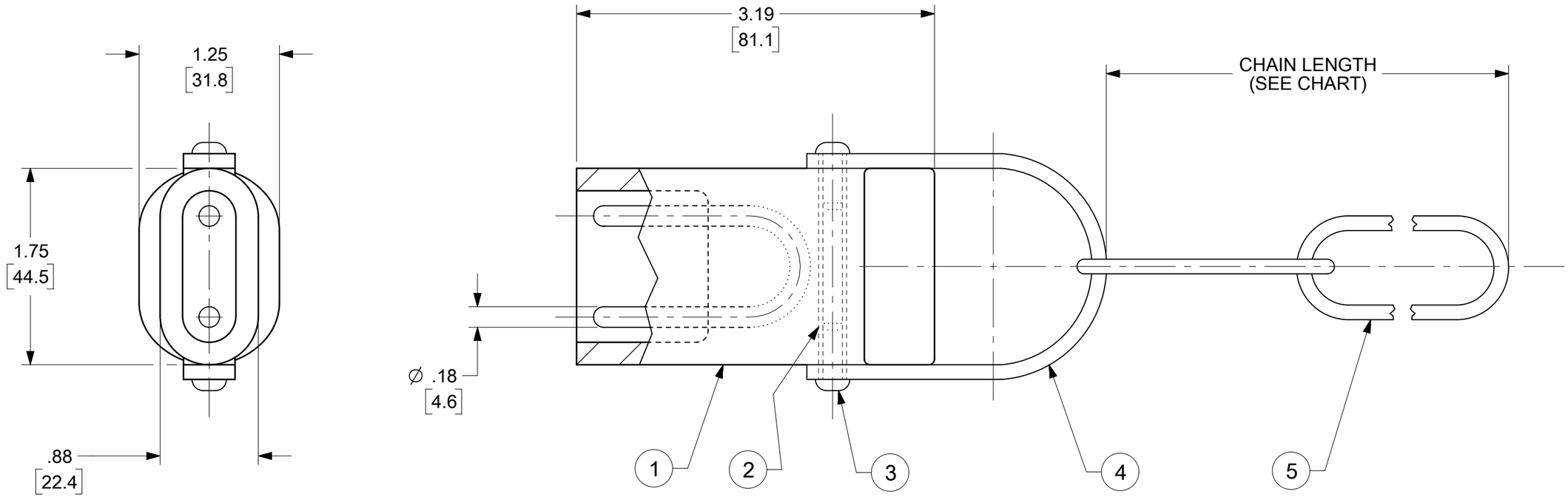

B

NOTES:
1. MATERIAL: AS NOTED
2. FINISH: AS NOTED
3. ELECTRICAL:
   VOLTAGE: 600VAC
   CURRENT: 25A
4. TEMP RATING: -20°C TO +90°C
5. CSA CERTIFIED FILE: LR6837
6. UL RECOGNIZED FILE: E46237
7. ALL DIMS ARE FOR REFERENCE UNLESS TOLERANCED OR NOTED OTHERWISE

ITEM	DESCRIPTION	MATERIAL	FINISH
5	CHAIN	STEEL	ZINC PLATE
4	YOKE	STEEL	ZINC PLATE
3	#10 X 1/2 RD HD DRIVE SCREW	STEEL	ZINC PLATE
2	SPACER TUBE	CRS	
1	SHORTING PLUG ASSEMBLY	Cu ALLOY (PIN)	YELLOW

MATERIAL NO.	ENGINEERING NO.	CHAIN LENGTH
1300190003	22803	1 FT. (0.31 M)
1300190004	22804	2 FT. (0.61 M)
1300190005	22805	3 FT. (0.91 M)

THIS DRAWING CONTAINS INFORMATION THAT IS PROPRIETARY TO MOLEX ELECTRONIC TECHNOLOGIES, LLC AND SHOULD NOT BE USED WITHOUT WRITTEN PERMISSION

FUNCTIONAL SYMBOLS
(FA) = 0
(FC) = 0
(FP) = 0
DIVISIONAL SYMBOLS

DIMENSION UNITS: INCH/MM
SCALE: 1:1

GENERAL TOLERANCES (UNLESS SPECIFIED)

	MM	INCH
4 PLACES	±	±
3 PLACES	±	±
2 PLACES	±	±
1 PLACE	±	±
0 PLACES	±	±
ANGULAR TOL	± °	

DRAFT WHERE APPLICABLE MUST REMAIN WITHIN DIMENSIONS

CURRENT REV DESC: ADDED NOTES

EC NO: 711366
DRWN: VHANDI 2021/12/22
CHK'D: RSTONE 2022/06/21
APPR: BWOODMAN 2022/06/24

INITIAL REVISION:
DRWN: RSTONE 2013/01/15
APPR: JFMURPHY 2013/03/01

THIRD ANGLE PROJECTION | DRAWING: B-SIZE | SERIES: 130019

molex

DIE BLOCK
SHORTING PLUG ASSEMBLY 2 POLE, FEMALE

PRODUCT CUSTOMER DRAWING

DOCUMENT NUMBER	DOC TYPE	DOC PART	REVISION
SD-130019-002	PSD	001	B

MATERIAL NUMBER	CUSTOMER	SHEET NUMBER
SEE TABLE	GENERAL MARKET	1 OF 1

DOCUMENT STATUS	P1	RELEASE DATE	2022/06/24 12:55:19

FORMAT: Eng-lega-mpd-prod-B
REVISION: E1
DATE: 2021/05/01