NOTES:
1. ELECTRICAL:
   - VOLTAGE RATING PER IEC 60664: 300V
   - VOLTAGE RATING PER UL: 300V
   - CURRENT: 8A
2. TEMP RATING: -25° TO +60°C
3. PROTECTION: IP67 (WHEN MATED)
4. COUPLING THREAD" 7/8-16
5. AGENCY:
   - UL RECOGNIZED, FILE: E152210
   - CSA CERTIFICATION FILE: LR6837
6 ALL DIMS ARE FOR REFERENCE
   UNLES NOTED OTHERWISE
7. PART NUMBERS WITH "H" HAVE
   TWO ID MARKERS ONE ON EACH END

WIRING DIAGRAM

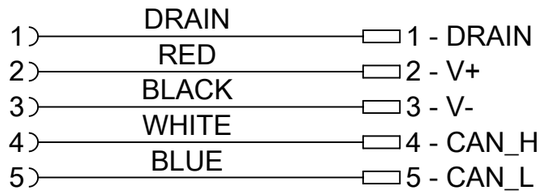

PART No. MATRIX

D	N	1	1	A	-	X	X	X	X	X

- Units: M = Meter; T= over 100 Meter
- Length Examples: 005 = 0.5 m; 010 = 1 m; 050 = 5 m; 100 = 10 m; 150 = 15 m
- OPTIONAL: H= ID CARRIER

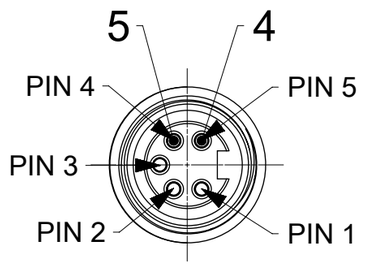

VIEW FROM THE FRONT SIDE

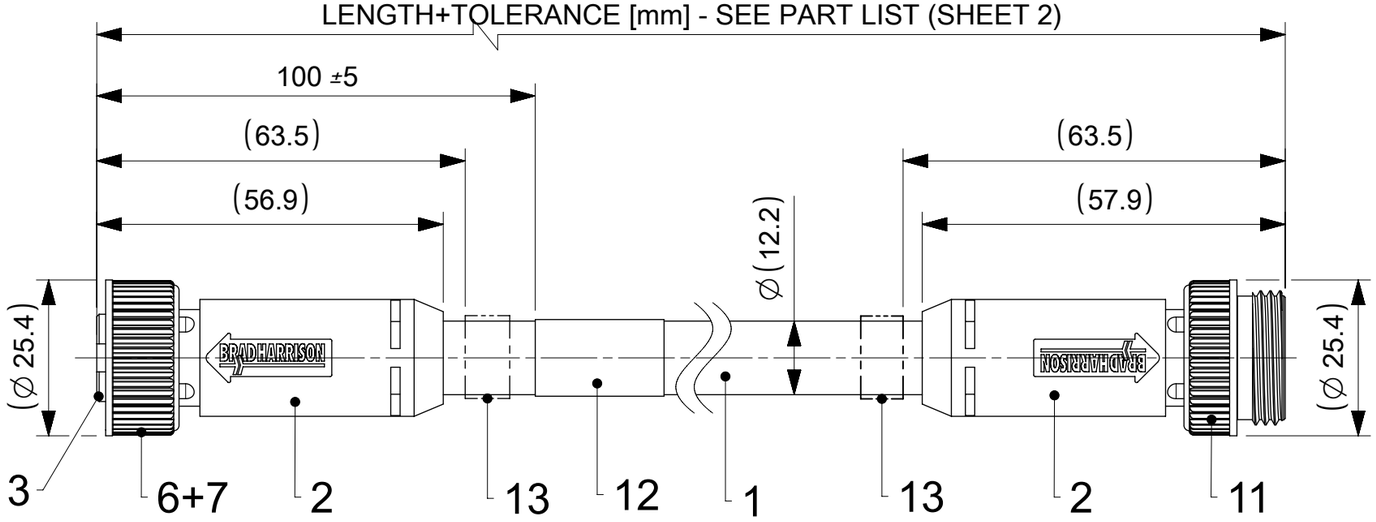

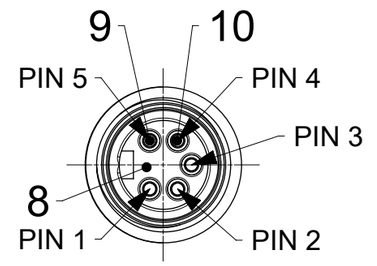

VIEW FROM THE FRONT SIDE

BILL OF MATERIALS

ITEM	QTY	DESCRIPTION	MATERIAL	FINISH/COLOR
13	2	ID CARRIER	PVC	-
12	1	LABEL WRAP	VINYL	YELLOW
11	1	COUPLING NUT A-SIZE EXT.	ZINC	BLACK
10	2	PIN CONTACT 16 AWG	COPPER	GOLD OVER Ni-PLATED
9	3	PIN CONTACT 18 AWG	COPPER	GOLD OVER Ni-PLATED
8	1	HOUSING A-SIZE 5P MALE	ARNITEL	BLACK
7	1	FRICTION RING A-SIZE	NYLON	GRAY
6	1	MC COUPLING NUT A-SIZE	ZINC	BLACK
5	2	MC SOCKET SLEEVE ASSY 16 AWG	COPPER	GOLD OVER Ni-PLATED
4	3	MC SOCKET SLEEVE ASSY 18 AWG	COPPER	GOLD OVER Ni-PLATED
3	1	HOUSING A-SIZE 5P FEMALE	ARNITEL	BLACK
2	-	MOULDING MATERIAL	ARNITEL	BLACK
1	-	TRUNK CABLE 19X30 AWG OD=12	PVC	GRAY

DOCUMENT STATUS | P1 | RELEASE DATE | 2025/06/25 06:18:32

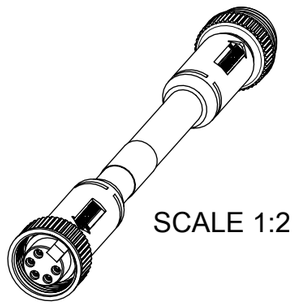

SCALE 1:2

THIS DRAWING CONTAINS INFORMATION THAT IS PROPRIETARY TO MOLEX ELECTRONIC TECHNOLOGIES, LLC AND SHOULD NOT BE USED WITHOUT WRITTEN PERMISSION

DIMENSION UNITS	SCALE
mm	1:1

GENERAL TOLERANCES (UNLESS SPECIFIED)

ANGULAR TOL	±	1.0 °
4 PLACES	±	
3 PLACES	±	
2 PLACES	±	0.05
1 PLACE	±	0.3
0 PLACES	±	0.5

DRAFT WHERE APPLICABLE MUST REMAIN WITHIN DIMENSIONS

CURRENT REV DESC: REMOVED OBSOLETED PART NUMBERS AS PER PCN#514336

EC NO: 825581
DRWN: SAMPRS 2025/04/25
CHK'D: GGA 2025/06/25
APPR: GGA 2025/06/25

INITIAL REVISION:
DRWN: MKOWALCZYK01 2018/09/07
APPR: MMATLA 2018/09/11

THIRD ANGLE PROJECTION | DRAWING: A3-SIZE | SERIES: 130025

molex

CSE MC 5P FE STR PVC MA STR 25M DE

PRODUCT CUSTOMER DRAWING

DOCUMENT NUMBER	DOC TYPE	DOC PART	REVISION
1300250051	PSD	000	B2

MATERIAL NUMBER	CUSTOMER	SHEET NUMBER
SEE SHEET 2	GENERAL MARKET	1 OF 2

FORMAT: master-tb-prod-A3
REVISION: J1
DATE: 2021/05/01

PART LIST

MOLEX PN	ENGINEERING NO.	LENGTH + TOL.[mm]
1300240329	DN11A-M650	65000 +1300
1300250048	DN11A-M003	300 +19
1300250051	DN11A-M005	500 +45
1300250054	DN11A-M010	1000 +56
1300250058	DN11A-M015	1500 +56
1300250061	DN11A-M020	2000 +89
1300250067	DN11A-M030	3000 +89
1300250071	DN11A-M040	4000 +165
1300250073	DN11A-M050	5000 +165
1300250076	DN11A-M060	6000 +165
1300250079	DN11A-M070	7000 +165
1300250081	DN11A-M080	8000 +317
1300250083	DN11A-M090	9000 +317
1300250085	DN11A-M100	10000 +317
1300250087	DN11A-M120	12000 +317
1300250090	DN11A-M130	13000 +317
1300250091	DN11A-M140	14000 +317
1300250092	DN11A-M150	15000 +610
1300250095	DN11A-M180	18000 +610
1300250097	DN11A-M200	20000 +610
1300250099	DN11A-M210	21000 +610
1300250102	DN11A-M240	24000 +610
1300250103	DN11A-M250	25000 +610
1300250105	DN11A-M270	27000 +610
1300250108	DN11A-M300	30000 +610

MOLEX PN	ENGINEERING NO.	LENGTH + TOL.[mm]
1300250114	DN11A-M350	35000 +700
1300250117	DN11A-M400	40000 +800
1300250119	DN11A-M450	45000 +900
1300250122	DN11A-M500	50000 +1000
1300250124	DN11A-M550	55000 +1100
1300250125	DN11A-M600	60000 +1200
1300250127	DN11A-M700	70000 +1400
1300250128	DN11A-M750	75000 +1500
1300250133	DN11A-T100	100000 +2000
1300250649	DN11A-M005H	500 +45
1300250652	DN11A-M050H	5000 +165
1300250654	DN11A-M060H	6000 +165

THIS DRAWING CONTAINS INFORMATION THAT IS PROPRIETARY TO MOLEX ELECTRONIC TECHNOLOGIES, LLC AND SHOULD NOT BE USED WITHOUT WRITTEN PERMISSION

DIMENSION UNITS	SCALE
mm	1:1

GENERAL TOLERANCES (UNLESS SPECIFIED)

ANGULAR TOL	±	1.0 °
4 PLACES	±	
3 PLACES	±	
2 PLACES	±	0.05
1 PLACE	±	0.3
0 PLACES	±	0.5

DRAFT WHERE APPLICABLE MUST REMAIN WITHIN DIMENSIONS

CURRENT REV DESC: REMOVED OBSOLETED PART NUMBERS AS PER PCN#514336

EC NO: 825581
DRWN: SAMPRS 2025/04/25
CHK'D: GGA 2025/06/25
APPR: GGA 2025/06/25

INITIAL REVISION:
DRWN: MKOWALCZYK01 2018/09/07
APPR: MMATLA 2018/09/11

molex

CSE MC 5P FE STR PVC MA STR 25M DE

PRODUCT CUSTOMER DRAWING

DOCUMENT NUMBER	DOC TYPE	DOC PART	REVISION
1300250051	PSD	000	B2

THIRD ANGLE PROJECTION	DRAWING	SERIES	MATERIAL NUMBER	CUSTOMER	SHEET NUMBER
	A4-SIZE	130025	SEE PART LIST	GENERAL MARKET	2 OF 2

DOCUMENT STATUS	P1	RELEASE DATE	2025/06/25 06:18:32

FORMAT: master-tb-prod-A4
REVISION: J1
DATE: 2021/05/01