NOTES:
1. ELECTRICAL:
   - VOLTAGE RATING PER IEC 60664: 300V
   - VOLTAGE RATING PER UL: 300V
   - CURRENT: 8A
2. TEMP RATING: -25° TO +60°C
3. PROTECTION: IP67 (WHEN MATED)
4. COUPLING THREAD" 7/8-16
5. AGENCY:
   - UL RECOGNIZED, FILE: E152210
   - CSA CERTIFICATION FILE: LR6837
6 ALL DIMS ARE FOR REFERENCE
   UNLES NOTED OTHERWISE
7. PART NUMBERS WITH "H" HAVE
   TWO ID MARKERS ONE ON EACH END

WIRING DIAGRAM

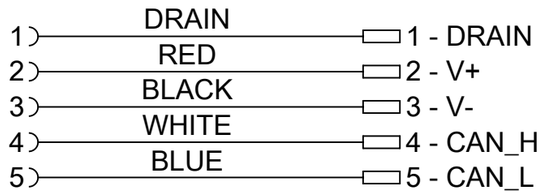


PART No. MATRIX

| D | N | 1 | 1 | A | - | X | X | X | X | X |
|---|---|---|---|---|---|---|---|---|---|---|

- Units: M = Meter; T= over 100 Meter
- Length Examples: 005 = 0.5 m; 010 = 1 m; 050 = 5 m; 100 = 10 m; 150 = 15 m
- OPTIONAL: H= ID CARRIER

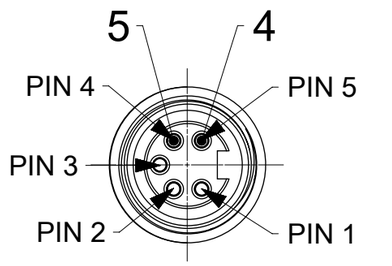


VIEW FROM THE FRONT SIDE

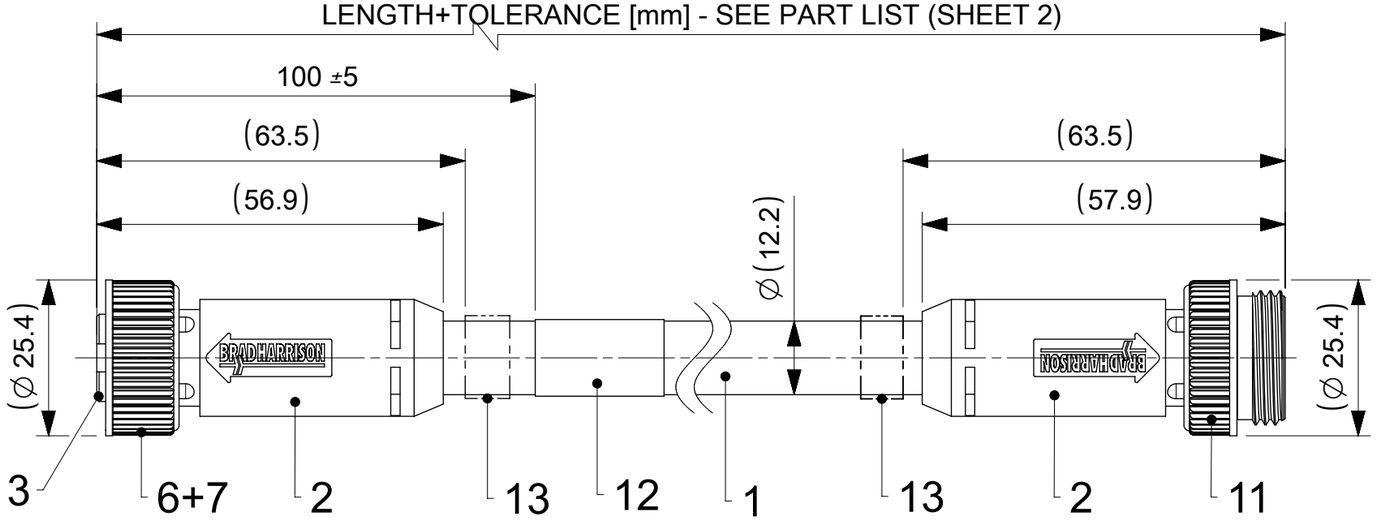


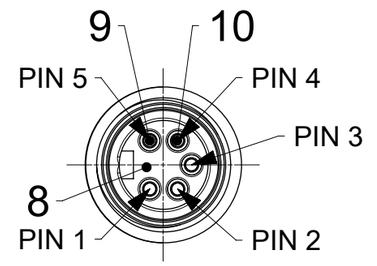


VIEW FROM THE FRONT SIDE

BILL OF MATERIALS

| ITEM | QTY | DESCRIPTION | MATERIAL | FINISH/COLOR |
|---|---|---|---|---|
| 13 | 2 | ID CARRIER | PVC | - |
| 12 | 1 | LABEL WRAP | VINYL | YELLOW |
| 11 | 1 | COUPLING NUT A-SIZE EXT. | ZINC | BLACK |
| 10 | 2 | PIN CONTACT 16 AWG | COPPER | GOLD OVER Ni-PLATED |
| 9 | 3 | PIN CONTACT 18 AWG | COPPER | GOLD OVER Ni-PLATED |
| 8 | 1 | HOUSING A-SIZE 5P MALE | ARNITEL | BLACK |
| 7 | 1 | FRICTION RING A-SIZE | NYLON | GRAY |
| 6 | 1 | MC COUPLING NUT A-SIZE | ZINC | BLACK |
| 5 | 2 | MC SOCKET SLEEVE ASSY 16 AWG | COPPER | GOLD OVER Ni-PLATED |
| 4 | 3 | MC SOCKET SLEEVE ASSY 18 AWG | COPPER | GOLD OVER Ni-PLATED |
| 3 | 1 | HOUSING A-SIZE 5P FEMALE | ARNITEL | BLACK |
| 2 | - | MOULDING MATERIAL | ARNITEL | BLACK |
| 1 | - | TRUNK CABLE 19X30 AWG OD=12 | PVC | GRAY |

DOCUMENT STATUS | P1 | RELEASE DATE | 2025/06/25 06:18:32

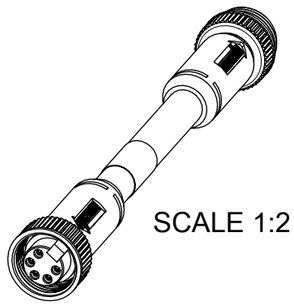

SCALE 1:2

THIS DRAWING CONTAINS INFORMATION THAT IS PROPRIETARY TO MOLEX ELECTRONIC TECHNOLOGIES, LLC AND SHOULD NOT BE USED WITHOUT WRITTEN PERMISSION

| DIMENSION UNITS | SCALE |
|---|---|
| mm | 1:1 |

GENERAL TOLERANCES (UNLESS SPECIFIED)

| | | |
|---|---|---|
| ANGULAR TOL | ± | 1.0 ° |
| 4 PLACES | ± | |
| 3 PLACES | ± | |
| 2 PLACES | ± | 0.05 |
| 1 PLACE | ± | 0.3 |
| 0 PLACES | ± | 0.5 |

DRAFT WHERE APPLICABLE MUST REMAIN WITHIN DIMENSIONS

CURRENT REV DESC: REMOVED OBSOLETED PART NUMBERS AS PER PCN#514336

EC NO: 825581
DRWN: SAMPRS 2025/04/25
CHK'D: GGA 2025/06/25
APPR: GGA 2025/06/25

INITIAL REVISION:
DRWN: MKOWALCZYK01 2018/09/07
APPR: MMATLA 2018/09/11

THIRD ANGLE PROJECTION | DRAWING: A3-SIZE | SERIES: 130025

molex

CSE MC 5P FE STR PVC MA STR 25M DE

PRODUCT CUSTOMER DRAWING

| DOCUMENT NUMBER | DOC TYPE | DOC PART | REVISION |
|---|---|---|---|
| 1300250051 | PSD | 000 | B2 |

| MATERIAL NUMBER | CUSTOMER | SHEET NUMBER |
|---|---|---|
| SEE SHEET 2 | GENERAL MARKET | 1 OF 2 |

FORMAT: master-tb-prod-A3
REVISION: J1
DATE: 2021/05/01

# PART LIST

| MOLEX PN | ENGINEERING NO. | LENGTH + TOL.[mm] |
|---|---|---|
| 1300240329 | DN11A-M650 | 65000 +1300 |
| 1300250048 | DN11A-M003 | 300 +19 |
| 1300250051 | DN11A-M005 | 500 +45 |
| 1300250054 | DN11A-M010 | 1000 +56 |
| 1300250058 | DN11A-M015 | 1500 +56 |
| 1300250061 | DN11A-M020 | 2000 +89 |
| 1300250067 | DN11A-M030 | 3000 +89 |
| 1300250071 | DN11A-M040 | 4000 +165 |
| 1300250073 | DN11A-M050 | 5000 +165 |
| 1300250076 | DN11A-M060 | 6000 +165 |
| 1300250079 | DN11A-M070 | 7000 +165 |
| 1300250081 | DN11A-M080 | 8000 +317 |
| 1300250083 | DN11A-M090 | 9000 +317 |
| 1300250085 | DN11A-M100 | 10000 +317 |
| 1300250087 | DN11A-M120 | 12000 +317 |
| 1300250090 | DN11A-M130 | 13000 +317 |
| 1300250091 | DN11A-M140 | 14000 +317 |
| 1300250092 | DN11A-M150 | 15000 +610 |
| 1300250095 | DN11A-M180 | 18000 +610 |
| 1300250097 | DN11A-M200 | 20000 +610 |
| 1300250099 | DN11A-M210 | 21000 +610 |
| 1300250102 | DN11A-M240 | 24000 +610 |
| 1300250103 | DN11A-M250 | 25000 +610 |
| 1300250105 | DN11A-M270 | 27000 +610 |
| 1300250108 | DN11A-M300 | 30000 +610 |

| MOLEX PN | ENGINEERING NO. | LENGTH + TOL.[mm] |
|---|---|---|
| 1300250114 | DN11A-M350 | 35000 +700 |
| 1300250117 | DN11A-M400 | 40000 +800 |
| 1300250119 | DN11A-M450 | 45000 +900 |
| 1300250122 | DN11A-M500 | 50000 +1000 |
| 1300250124 | DN11A-M550 | 55000 +1100 |
| 1300250125 | DN11A-M600 | 60000 +1200 |
| 1300250127 | DN11A-M700 | 70000 +1400 |
| 1300250128 | DN11A-M750 | 75000 +1500 |
| 1300250133 | DN11A-T100 | 100000 +2000 |
| 1300250649 | DN11A-M005H | 500 +45 |
| 1300250652 | DN11A-M050H | 5000 +165 |
| 1300250654 | DN11A-M060H | 6000 +165 |

THIS DRAWING CONTAINS INFORMATION THAT IS PROPRIETARY TO MOLEX ELECTRONIC TECHNOLOGIES, LLC AND SHOULD NOT BE USED WITHOUT WRITTEN PERMISSION

| DIMENSION UNITS | SCALE |
|---|---|
| mm | 1:1 |

GENERAL TOLERANCES (UNLESS SPECIFIED)

| | | |
|---|---|---|
| ANGULAR TOL | ± | 1.0 ° |
| 4 PLACES | ± | |
| 3 PLACES | ± | |
| 2 PLACES | ± | 0.05 |
| 1 PLACE | ± | 0.3 |
| 0 PLACES | ± | 0.5 |

DRAFT WHERE APPLICABLE MUST REMAIN WITHIN DIMENSIONS

CURRENT REV DESC: REMOVED OBSOLETED PART NUMBERS AS PER PCN#514336

EC NO: 825581
DRWN: SAMPRS 2025/04/25
CHK'D: GGA 2025/06/25
APPR: GGA 2025/06/25

INITIAL REVISION:
DRWN: MKOWALCZYK01 2018/09/07
APPR: MMATLA 2018/09/11

molex

CSE MC 5P FE STR PVC MA STR 25M DE

PRODUCT CUSTOMER DRAWING

| DOCUMENT NUMBER | DOC TYPE | DOC PART | REVISION |
|---|---|---|---|
| 1300250051 | PSD | 000 | B2 |

| THIRD ANGLE PROJECTION | DRAWING | SERIES | MATERIAL NUMBER | CUSTOMER | SHEET NUMBER |
|---|---|---|---|---|---|
| | A4-SIZE | 130025 | SEE PART LIST | GENERAL MARKET | 2 OF 2 |

| DOCUMENT STATUS | P1 | RELEASE DATE | 2025/06/25 06:18:32 |
|---|---|---|---|

FORMAT: master-tb-prod-A4
REVISION: J1
DATE: 2021/05/01