MATERIAL NUMBER	OLD PART NUMBER
130035-0015	115060A

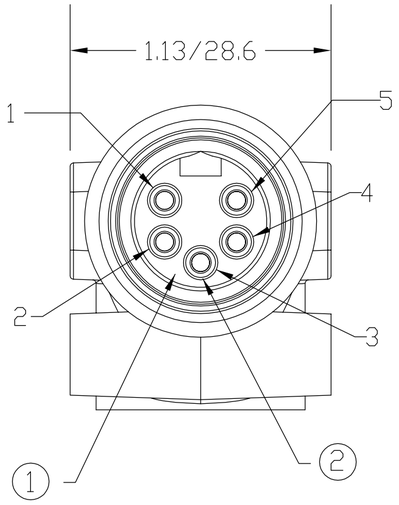

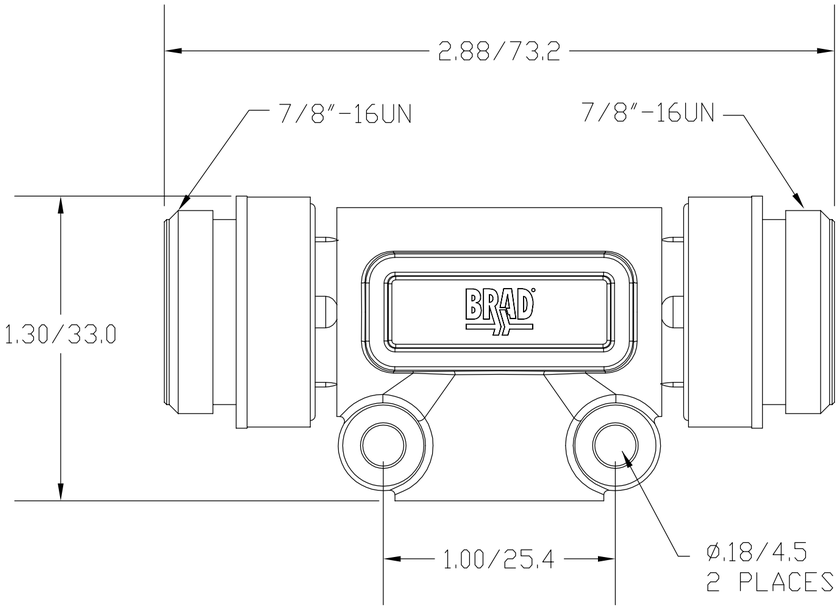

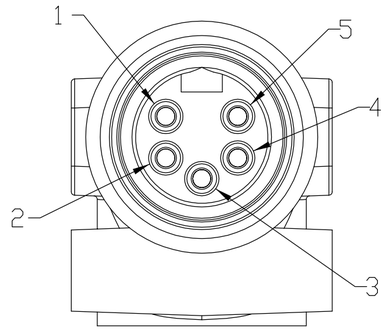

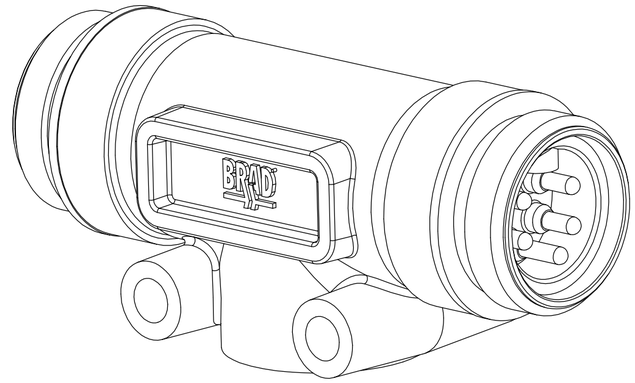

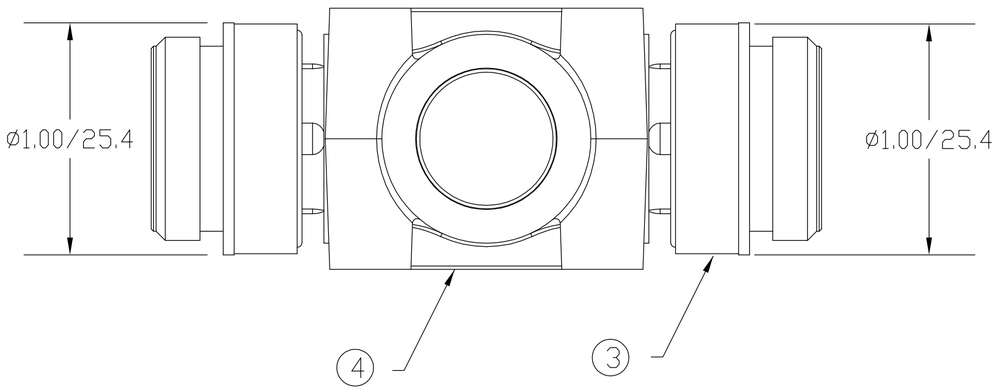

SCHEMATIC



VOLTAGE RATING	25 VAC/VDC
AMPERAGE RATING	4 AMPS
PROTECTION	IP67
OPERATING TEMPERATURE	-20°C TO 80°C

ITEM	COMPONENT	MATERIAL	FINISH
1	INSERT	TPE	GRAY
2	CONTACT PIN	COPPER ALLOY	GOLD OVER NICKEL
3	COUPLING NUT	ZINC DIE CAST	BLACK E-COATED
4	OVERMOLD	TPE	GRAY

RLSD DRAWING
EC NO: WNA2009-0576 3/11/09 —
DRWN: BWOODMAN
CH'KD: KJ
APPR: JFMURPHY 2009/03/31
DESCRIPTION
A
REV

QUALITY SYMBOL
▼=0
Ⓒ=0

GENERAL TOLERANCES (UNLESS SPECIFIED)

	mm	INCH
4 PLACES	±----	±----
3 PLACES	±----	±----
2 PLACES	±----	±.01
1 PLACE	±0.3	±----
ANGULAR ±----°		

DRAFT WHERE APPLICABLE MUST REMAIN WITHIN DIMENSIONS

DIMENSION STYLE: IN/MM
SCALE: ----
DESIGN UNITS: ----
THIRD ANGLE PROJECTION

DRAWN BY: BW DATE: 2009/03/12
CHECKED BY: JM DATE: 2009/03/12
APPROVED BY: ---- DATE: ----

TITLE: MC 5P MALE GENDER CHANGE

----

molex MOLEX INCORPORATED

MATERIAL NO.: SEE CHART
DOCUMENT NO.: SD-130035-003
SHEET NO.: 1 0F 1

SIZE C

THIS DRAWING CONTAINS INFORMATION THAT IS PROPRIETARY TO MOLEX INCORPORATED AND SHOULD NOT BE USED WITHOUT WRITTEN PERMISSION