"Explosionszeichnung als Referenz,
Polzahl siehe description"
"Exploded drawing for reference,
pole count see description"

A2

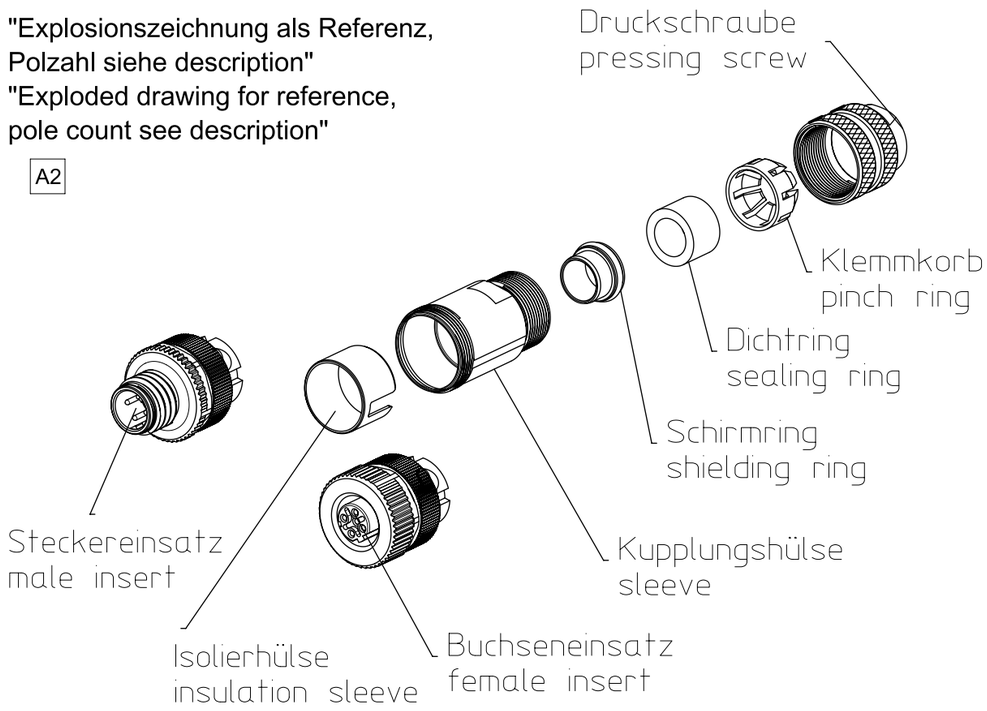

CHANGES SEE REVISION MARKING A2	NOTES

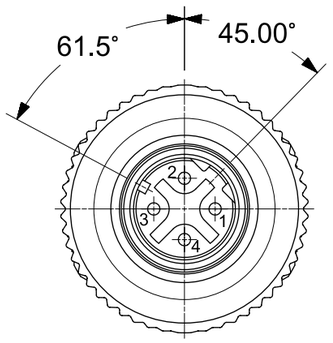

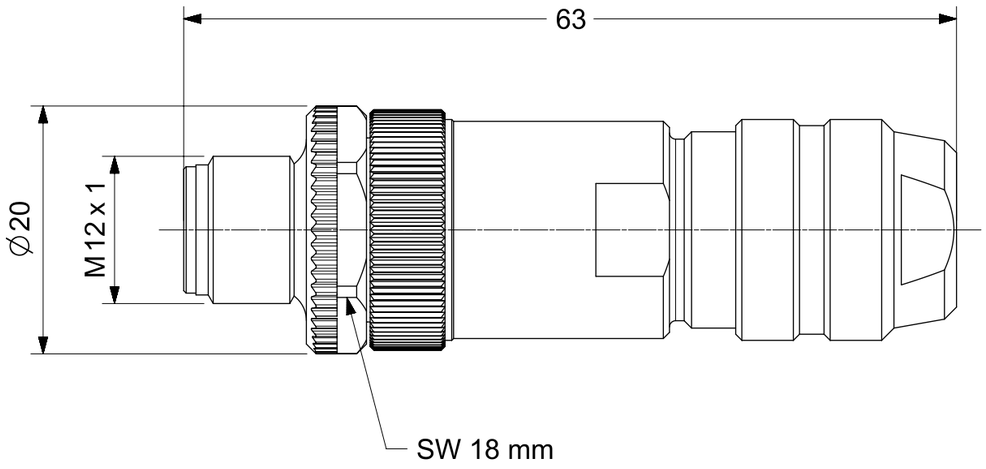

NOTES:

1: LOCKING SYSTEM: SCREW
WIRE GAUGE: 0.75mm²
CABLE OUTLET: 6 - 8mm
2. ELECTRICAL DATA:
CURRENT RATING: 4A
VOLTAGE RATING: 250V
MATING CYCLES: > 100
3. MECHANICAL:
OPERATING TEMP.: -40°C - 85°C
PROTECTION CLASS: IP67
4. MATERIAL:
CONTACT: CuZn (BRASS)
CONTACT PLATING: Au (GOLD)
CONTACT BODY: PA
HOUSING: zinc die cast
COUPLING NUT: CuZn (BRASS)

ENG.-NO: E1AS06-32

QUALITY SYMBOLS	
FA	= 0
FC	= 0
FP	= 0
▼	= 0
C	= 0
☒	= 0
■	= 0
V	= 0

THIS DRAWING CONTAINS INFORMATION THAT IS PROPRIETARY TO MOLEX ELECTRONIC TECHNOLOGIES, LLC AND SHOULD NOT BE USED WITHOUT WRITTEN PERMISSION

EC NO: 107393 2016/08/10
DRWN: LRAMAMURTHY
CHK'D:
APPR: RSILLER 2016/08/29

A2 | REV

GENERAL TOLERANCES (UNLESS SPECIFIED)

ANGULAR TOL ±	1.0	°
4 PLACES	±	
3 PLACES	±	
2 PLACES	±	0.05
1 PLACE	±	0.3
0 PLACES	±	0.5

DRAFT WHERE APPLICABLE MUST REMAIN WITHIN DIMENSIONS

DIMENSION UNITS	SCALE
MM	2:1

DRWN BY	DATE
MSCHWARZ	2015/07/06
CHK'D BY	DATE
APPR BY	DATE

DRAWING SIZE: A3

THIRD ANGLE PROJECTION

molex®

FA M12 ETH 4P DC MA STR SCR SHLD

PRODUCT CUSTOMER DRAWING

SERIES	MATERIAL NUMBER	CUSTOMER
130047	1300470035	GENERAL MARKET

DOCUMENT NUMBER	DOC TYPE	DOC PART	SHEET NUMBER
1300470035	PSD	000	1 OF 1

RELEASE STATUS	P1	RELEASE DATE	29.08.2016 14:02:51

FORMAT: master-tb-prod-A3
REVISION: G
DATE: 2015/12/14