PART NO.	ENGINEERING NO.	FINISHED LENGTH	CABLE CODE	CABLE COLOR	CABLE TYPE
1300620301	334T30K09M010A3	3 FT 3 IN (1M)	K09	YELLOW	FLEX
1300620306	334T30K09M100A3	10 FT 9 IN (10M)	K09	YELLOW	FLEX
1300622004	334T30K09M240A3	78 FT 8 IN (24M)	K09	YELLOW	FLEX
1300620322	334T30K36M020A3	6 FT 7 IN (2M)	K36	BLACK	FLEX
1300620300	334T30K26M005A3	1 FT 7.7 IN (.5M)	K26	BLACK	STATIC

C C C C

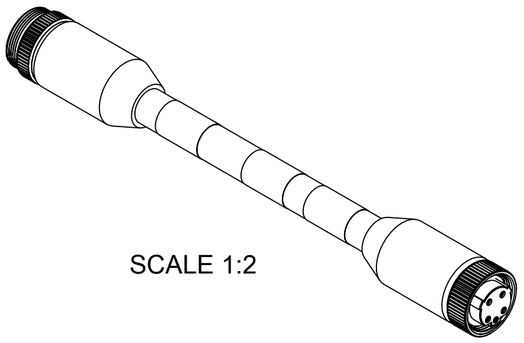

SCALE 1:2

CABLE LENGTH TOLERANCES
<.3M [1FT]: +19mm-0 [+.75in-0]
.3 - .9M [1 - 3FT]: +44.5mm-0 [+1.75in-0]
.9 - 1.8M [3 - 6FT]: +55.6mm-0 [+2.19in-0]
1.8 - 3.7M [6 - 12FT: +88.9mm-0 [+3.50in-0]
3.7 - 7.3M [12 - 24FT]: +165.1mm-0 [+6.50in-0]
7.3-14.6M [24 - 48FT]: +317.5mm-0 [+12.50in-0]
14.6 - 30.5M [48-100FT]: +622.3mm-0 [+24.50in-0]
OVER 30M [100FT] +2% OF FINISHED LENGTH

MALE FACE VIEW

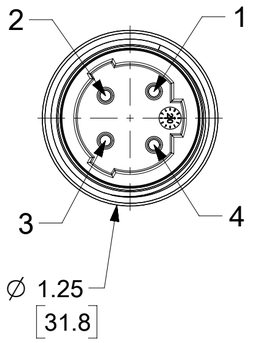

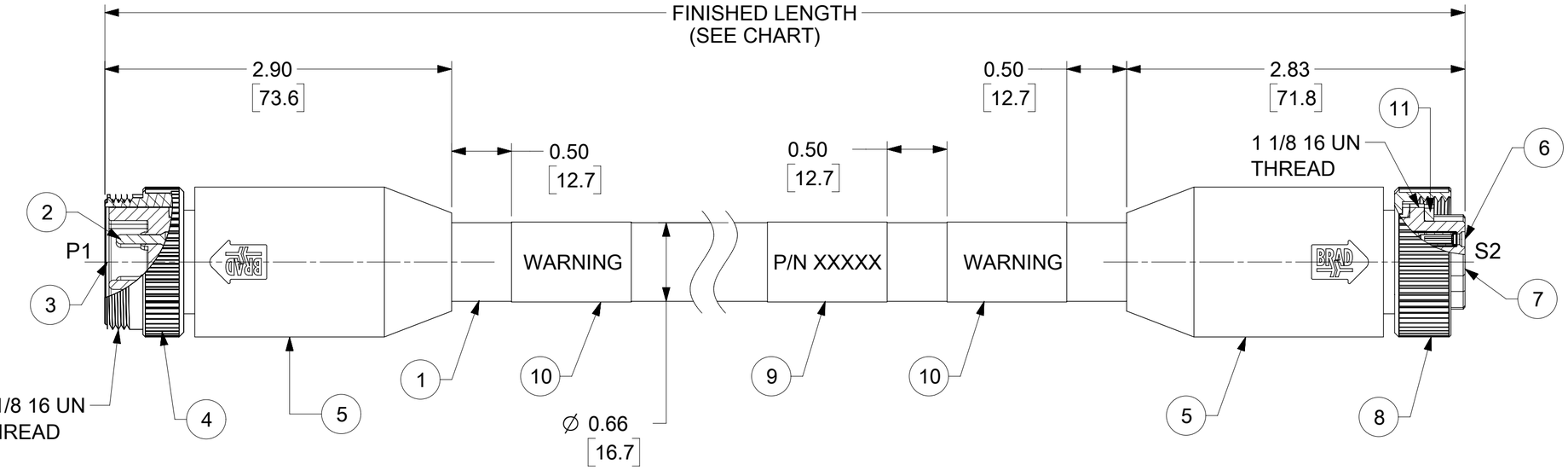

FEMALE FACE VIEW

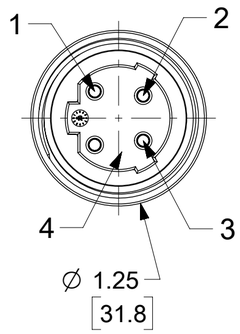

NOTE:
1) MATERIAL: SEE TABLE
2) FINISHES: SEE TABLE
3) ELECTRICAL DATA
   MAX. VOLTAGE: IEC60664 480V
   UL2237 600V
   MAX. CURRENT: 25A
4) ENVIRONMENTAL
   PROTECTION: IP67 (WHEN MATED)
   TEMPERATURE RATING: -40°C TO +90°C
5) UL LISTED FILE: E258922
6) DIMENSIONS ARE REFERENCE ONLY UNLESS OTHERWISE SPECIFIED

WIRING DIAGRAM

P1		S2
1	BLACK#1	1
2	BLACK#2	2
3	BLACK#3	3
4	GREEN/YELLOW	4

PART NUMBER LEGEND

334T30K09M010A3

- 334T30K: CABLE TYPE
- 09M010A3: FINISH LENGTH
  - M001 = 0.1 METER
  - M010 = 1 METER
  - M100 = 10 METER

ITM	DESCRIPTION	MATERIAL	FINISH
11	MATING GASKET	NITRILE	BLACK
10	WARNING LABEL	VINYL	BLACK/ORANGE
9	WRAP LABEL	VINYL	BLACK/YELLOW
8	FEMALE COUPLING NUT	BRASS	NICKEL PLATED
7	4P FEMALE INSERT	TPE	BLACK
6	SOCKET CONTACT	BRASS	GOLD PLATED
5	OVER MOLD	TPE	GRAY
4	MALE COUPLING NUT	BRASS	NICKEL PLATED
3	4P MALE INSERT	TPE	BLACK
2	PIN CONTACT	BRASS	GOLD PLATED
1	#12/4C AWG VFD CABLE	TPE JACKET	SEE CHART

DOCUMENT STATUS | P1 | RELEASE DATE | 2024/06/25 14:15:45

THIS DRAWING CONTAINS INFORMATION THAT IS PROPRIETARY TO MOLEX ELECTRONIC TECHNOLOGIES, LLC AND SHOULD NOT BE USED WITHOUT WRITTEN PERMISSION

FUNCTIONAL SYMBOLS
FA = 0
FC = 0
FP = 0
DIVISIONAL SYMBOLS

DIMENSION UNITS: INCH/MM | SCALE: 1:1

GENERAL TOLERANCES (UNLESS SPECIFIED)

	MM	INCH
4 PLACES	±	±
3 PLACES	±	±
2 PLACES	±	±
1 PLACE	±	±
0 PLACES	±	±
ANGULAR TOL	± °	

DRAFT WHERE APPLICABLE MUST REMAIN WITHIN DIMENSIONS

CURRENT REV DESC: TABLE UPDATE: ADDED 'K' PREFIX TO CABLE CODE AND CHANGED "STATIC" TO "FLEX" FOR K09 CABLE.

EC NO: 790458
DRWN: VBASUTHKARP 2024/06/25
CHK'D: PDODDAMANEMY 2024/06/25
APPR: BWOODMAN 2024/06/25

INITIAL REVISION:
DRWN: MZIELINSKI 2017/04/11
APPR: BWOODMAN 2017/06/30

molex

MINI CHANGE BRAD POWER CORDSET C SIZE
4 POLE MALE-FEMALE STRAIGHT TRI KEY 12 AWG

PRODUCT CUSTOMER DRAWING

DOCUMENT NUMBER	DOC TYPE	DOC PART	REVISION
1300620301	PSD	000	C

THIRD ANGLE PROJECTION	DRAWING	SERIES	MATERIAL NUMBER	CUSTOMER	SHEET NUMBER
	C-SIZE	130062	SEE TABLE	GENERAL MARKET	1 OF 1

*FORMAT: Eng-lega-master-dc-prod-C
REVISION: E
DATE: 2020/01/14