PART NO	ENGINEERING NO.	FINISHED LENGTH
1300660088	1R4006A28F060G	6FT [1M 32 IN]
1300660095	1R4006A28M050G	5M [16 FT 5 IN]

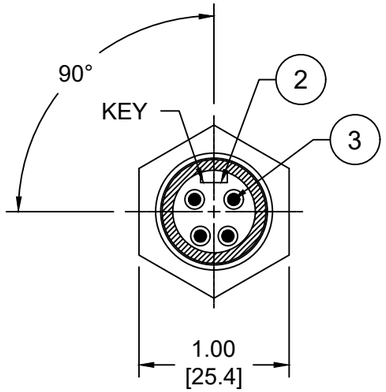

MALE - FACE VIEW

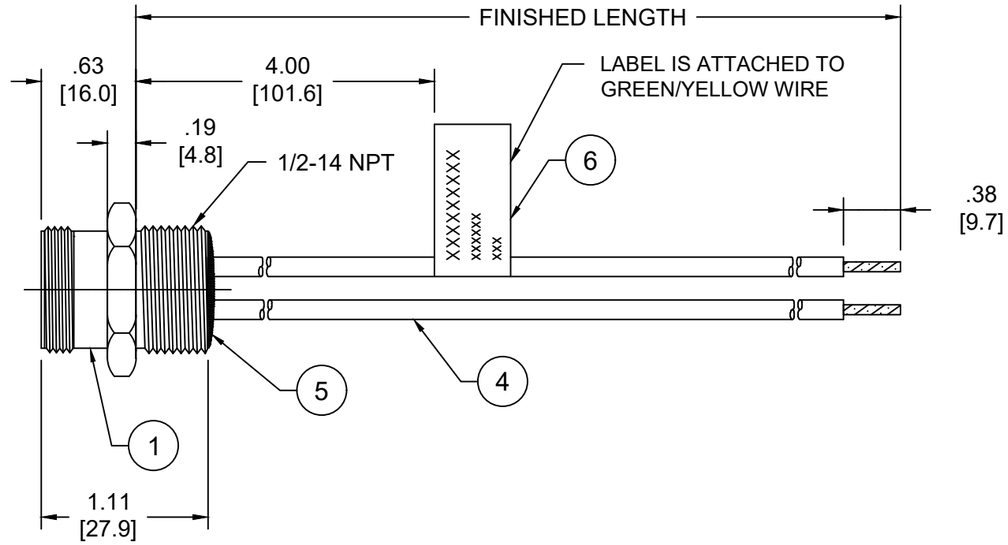

FACE VIEW-MALE INSERT

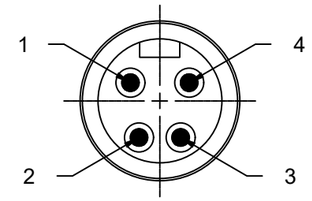

1 BLACK
2 WHITE
3 RED
4 GREEN/YELLOW

NOTES:
1. MATERIAL: AS NOTED
2. FINISH: AS NOTED
3. ELECTRICAL:
   VOLTAGE: 483V PER IEC60664
   600V PER UL2237
   CURRENT: 15A
4. TEMP RATING: -20°TO +105°C
5. PROTECTION: IP67 (WHEN MATED)
6. COUPLING THREAD: 7/8-16UN
7. UL LISTED FILE: E258922
8. ALL DIMENSIONS ARE FOR REFERENCE
   UNLESS TOLERANCED OR NOTED OTHERWISE

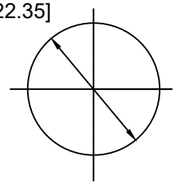

REF. KNOCKOUT HOLE

PART NO. MATRIX
1R4006A28A060G

FINISHED LENGTH:
A060= 6 IN.
F020= 2 FEET
M005= 0.5 METER
M010= 1 METER
M100= 10 METER

CABLE LENGTH TOLERANCES
<.3M [1FT]: +19mm-0 [+.75in-0]
.3 - .9M [1 - 3FT]: +44.5mm-0 [+1.75in-0]
.9 - 1.8M [3 - 6FT]: +55.6mm-0 [+2.19in-0]
1.8 - 3.7M [6 - 12FT: +88.9mm-0 [+3.50in-0]
3.7 - 7.3M [12 - 24FT]: +165.1mm-0 [+6.50in-0]
7.3-14.6M [24 - 48FT]: +317.5mm-0 [+12.50in-0]
14.6 - 30.5M [48-100FT]: +622.3mm-0 [+24.50in-0]
OVER 30M [100FT] +2% OF FINISHED LENGTH

ITEM	DESCRIPTION	MATERIAL	FINISH
6	FLAG LABEL	VINYL	BLACK/YELLOW
5	POTTING MATERIAL	EPOXY	
4	WIRE, 14 AWG (UL1015)	PVC INSULATION	SEE FACE VIEW
3	CONTACT PIN	COPPER ALLOY	GOLD OVER NICKEL
2	MALE INSERT	TPE	BLACK
1	RECEPTACLE SHELL	ZINC DIE-CAST	BLACK

THIS DRAWING CONTAINS INFORMATION THAT IS PROPRIETARY TO MOLEX ELECTRONIC TECHNOLOGIES, LLC AND SHOULD NOT BE USED WITHOUT WRITTEN PERMISSION

DIMENSION UNITS: INCH/MM | SCALE: NTS

GENERAL TOLERANCES (UNLESS SPECIFIED)

	mm	INCH
4 PLACES	± ----	± ----
3 PLACES	± ----	± ----
2 PLACES	± ----	± ----
1 PLACE	± ----	± ----
0 PLACES	± ----	± ----
ANGULAR TOL ±	---- °	

DRAFT WHERE APPLICABLE MUST REMAIN WITHIN DIMENSIONS

CURRENT REV DESC: REMOVED OBSOLETED PART NUMBERS AS PER PCN#516685

EC NO: 830097
DRWN: SANATK1 2025/07/31
CHK'D: GGA 2025/08/06
APPR: GGA 2025/08/06

INITIAL REVISION:
DRWN: RSTONE 2017/01/11
APPR: BWOODMAN 2017/01/26

THIRD ANGLE PROJECTION | DRAWING: B-SIZE | SERIES: 130066

molex

MINI-CHANGE RECEPTACLE A-SIZE
4 POLE, MALE, STRAIGHT, SINGLE KEY, 14 AWG

PRODUCT CUSTOMER DRAWING

DOCUMENT NUMBER	DOC TYPE	DOC PART	REVISION
SD-130066-080	PSD	001	C1

MATERIAL NUMBER	CUSTOMER	SHEET NUMBER
SEE CHART	GENERAL MARKET	1 OF 1

DOCUMENT STATUS	P1	RELEASE DATE	2025/08/06 10:03:58

FORMAT: IN-ACAD-tb-prod-B
REVISION: B
DATE: 2020/01/14