PART NUMBER	ENGINEERING NUMBER
1300680034	TC30130-200

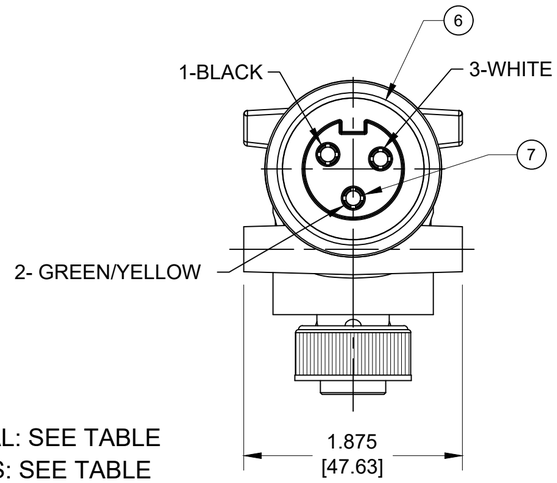

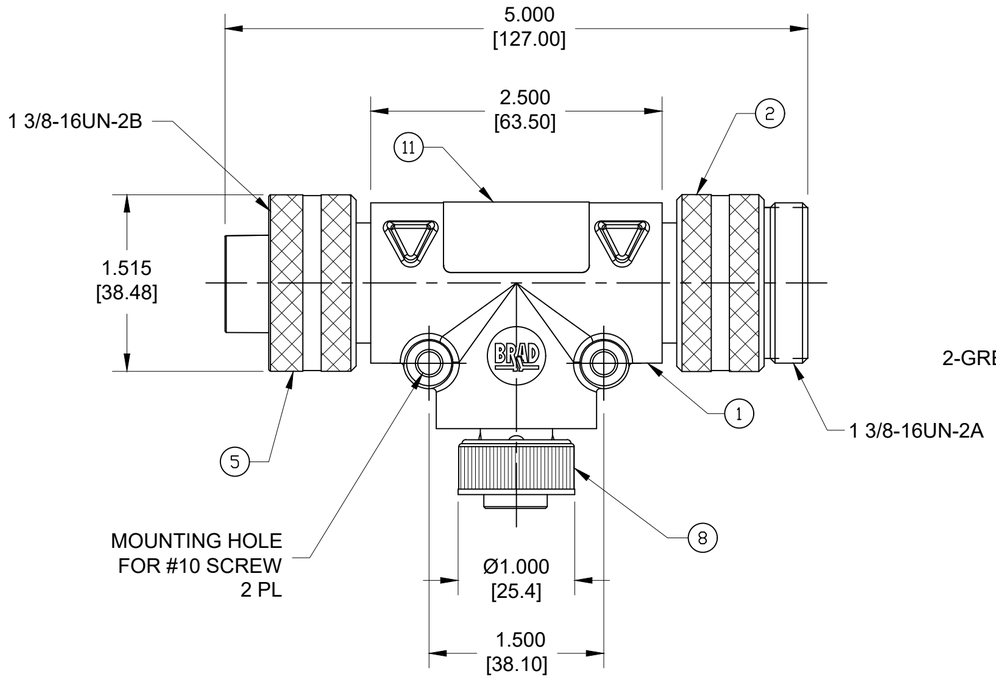

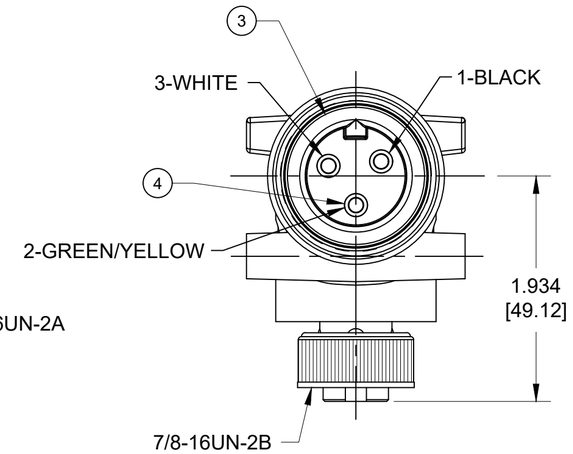

NOTES:
1. MATERIAL: SEE TABLE
2. FINISHES: SEE TABLE
3. ELECTRICAL DATA:
   REDUCING TEE QC TO MC
   POLES: 3
   VOLTAGE: 600V AC/DC PER UL 2237 (B)
   500V AC/DC PER IEC 60664
   CURRENT: 15A
4. TEMPERATURE RANGE: -20°C TO +105°C (B)
5. PROTECTION: IP67 (WHEN MATED)
6. LABEL IS MARKED WITH P/N, DATE CODE, VOLTAGE & AMPERAGE
7. PACKAGING:
   ASSEMBLIES ARE BAGGED SEPARATELY IN POLY BAGS WITH BAR CODE LABEL ATTACHED TO THE OUTSIDE OF THE BAG.
8. UL LISTED FILE: E258922
9. ASSEMBLY IS RoHS COMPLIANT
10. DIMENSIONS SHOWN ARE FOR REFERENCE UNLESS TOLERANCED OR NOTED OTHERWISE

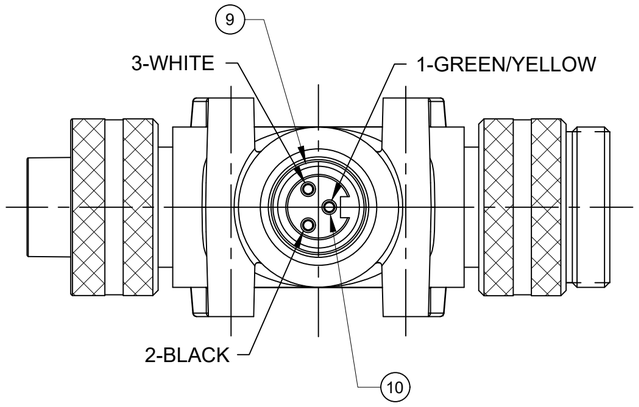

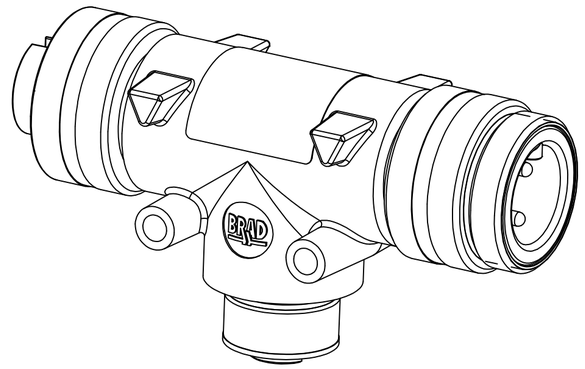

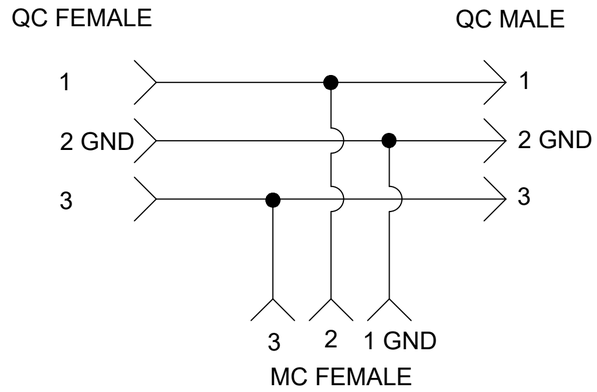

WIRE DIAGRAM

ITEM	DESCRIPTION	MATERIAL	FINISH	
11	LABEL	PLASTIC FILM	BLACK/YELLOW	
10	MC SOCKET CONTACT	COPPER ALLOY	GOLD PLATED	
9	MC FEMALE INSERT	TPE	BLACK	B
8	MC COUPLING NUT	ZINC ALLOY	BLACK E-COAT	
7	QC SOCKET CONTACT	COPPER ALLOY	GOLD PLATED	
6	QC FEMALE INSERT	TPE	BLACK	B
5	QC FEMALE COUPLING NUT	ALUMINUM	CLEAR ANODIZE	
4	QC PIN CONTACT	COPPER ALLOY	GOLD PLATED	
3	QC MALE INSERT	TPE	BLACK	B
2	QC MALE COUPLING NUT	ALUMINUM	CLEAR ANODIZE	
1	OVERMOLD	TPE	GRAY	B

THIS DRAWING CONTAINS INFORMATION THAT IS PROPRIETARY TO MOLEX ELECTRONIC TECHNOLOGIES, LLC AND SHOULD NOT BE USED WITHOUT WRITTEN PERMISSION

FUNCTIONAL SYMBOLS: FA=0, FC=0, FP=0
DIVISIONAL SYMBOLS

DIMENSION UNITS: INCH/MM
SCALE: NTS

GENERAL TOLERANCES (UNLESS SPECIFIED)

	mm	INCH
4 PLACES	±----	±----
3 PLACES	±----	±0.005
2 PLACES	±0.13	±0.01
1 PLACE	±0.25	±0.02
0 PLACES	±----	±----
ANGULAR TOL ± 0.5 °		

DRAFT WHERE APPLICABLE MUST REMAIN WITHIN DIMENSIONS

CURRENT REV DESC: ITEM# 1, 3, 6 & 9 WERE PVC. ADDED IEC VOLTAGE. MODIFIED TEMP RATING. REMOVED MAX THRU CURRENT

EC NO:	663067	
DRWN:	ABENJAMINLW	2021/01/22
CHK'D:	RSTONE	2021/05/06
APPR:	BWOODMAN	2021/05/13
INITIAL REVISION:		
DRWN:	KJOZWIK	2010/01/12
APPR:	JFMURPHY	2010/01/15

molex

BRAD POWER

QC 3 POLE TEE W/3 POLE MC DROP

PRODUCT CUSTOMER DRAWING

DOCUMENT NUMBER	DOC TYPE	DOC PART	REVISION
SD-130068-005	PSD	001	B

THIRD ANGLE PROJECTION | DRAWING: C-SIZE | SERIES: 130068 | MATERIAL NUMBER: SEE CHART | CUSTOMER: GENERAL MARKET | SHEET NUMBER: 1 OF 1

DOCUMENT STATUS	P1	RELEASE DATE	2021/05/13 00:30:21

FORMAT: IN-ACAD-tb-prod-C
REVISION: B
DATE: 2020/01/14