ORDER NO	130083-0269
WOODHEAD ENG. NO	9383-3000
WIRE GAUGE	12
CONDUCTORS	3
AMPERAGE	18A
WORKING CORD	25 FT. YELLOW
CORD TYPE	SOOW
CONSTRUCTION	HEAVY WALL CAST ALUMINUM
PAINT	YELLOW POWDER COAT
REEL ENCLOSURE RATING	NEMA 4 INDOOR / OUTDOOR
RETRACTION WEIGHT	4.0 LB [1.8 KG]

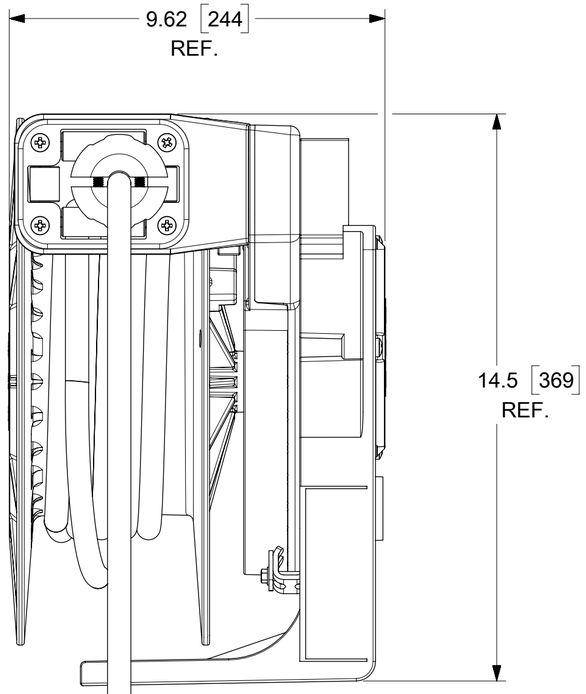

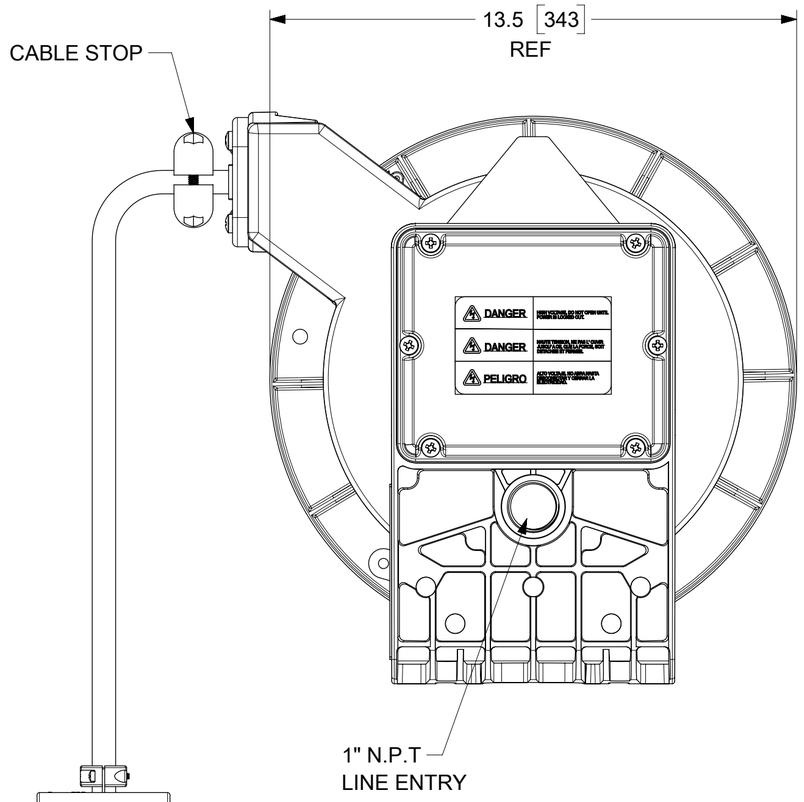

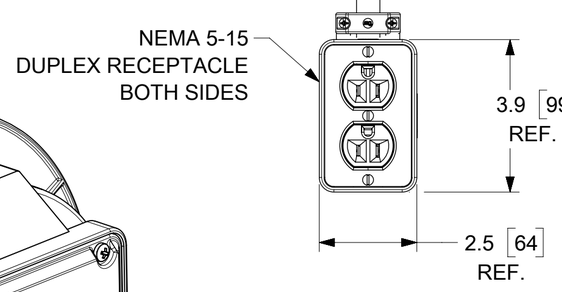

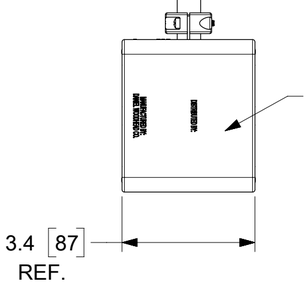

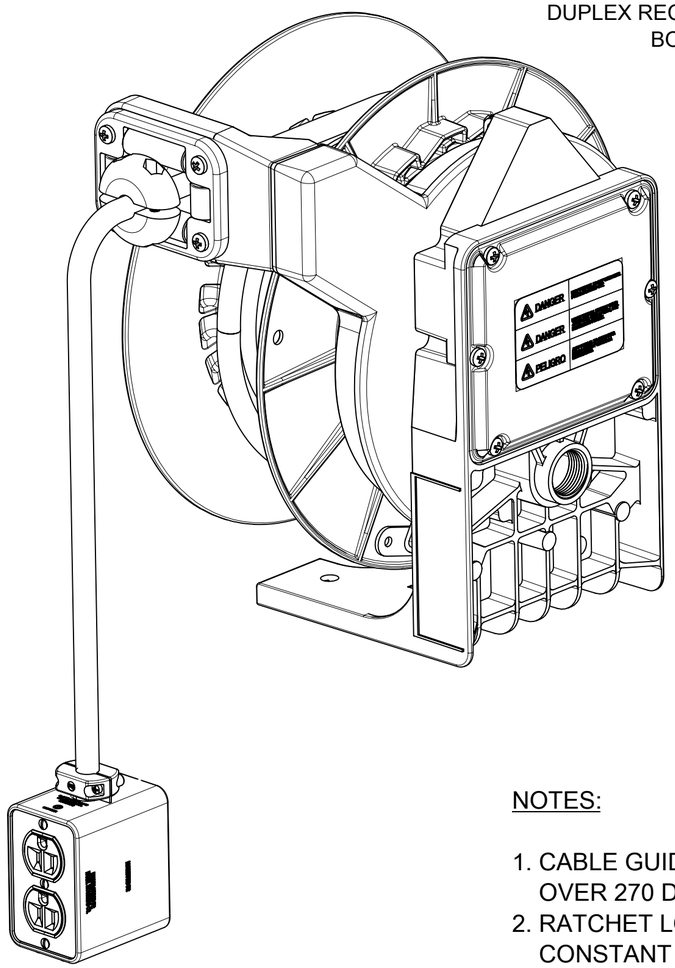

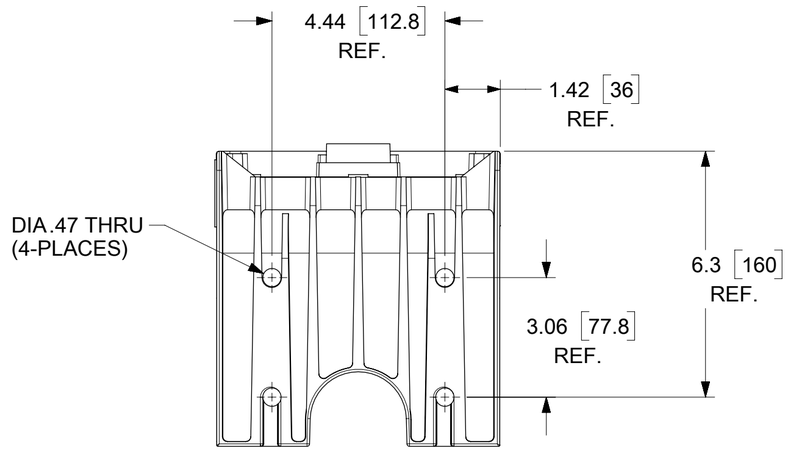

BOTTOM VIEW

NOTES:

1. CABLE GUIDE IS ADJUSTABLE EVERY 5 DEGREES OVER 270 DEGREE ARC.
2. RATCHET LOCK IS EASY TO DISENGAGE FOR CONSTANT TENSION.
3. REEL CANNOT BE "LOCKED OUT" AT FULL EXTENSION.
4. CABLE STOP IS INCLUDED.

DOCUMENT STATUS	P1	RELEASE DATE	2022/06/03 14:26:14

THIS DRAWING CONTAINS INFORMATION THAT IS PROPRIETARY TO MOLEX ELECTRONIC TECHNOLOGIES, LLC AND SHOULD NOT BE USED WITHOUT WRITTEN PERMISSION

FUNCTIONAL SYMBOLS
FA = 0
FC = 0
FD = 0
DIVISIONAL SYMBOLS

DIMENSION UNITS: INCH/MM
SCALE: NTS

GENERAL TOLERANCES (UNLESS SPECIFIED)

	MM	INCH
4 PLACES	±	±
3 PLACES	±	± 0.005
2 PLACES	± 0.13	± 0.01
1 PLACE	± 0.25	± 0.02
0 PLACES	±	±
ANGULAR TOL	± 0.5 °	

DRAFT WHERE APPLICABLE MUST REMAIN WITHIN DIMENSIONS

CURRENT REV DESC: RELEASE CUSTOMER DRAWING

EC NO: 674791
DRWN: DSOPPIN 2020/07/24
CHK'D: DSOPPIN 2022/06/01
APPR: HKNEELAND 2022/06/03

INITIAL REVISION:
DRWN: DSOPPIN 2020/07/24
APPR: HKNEELAND 2022/06/03

THIRD ANGLE PROJECTION | DRAWING: C-SIZE | SERIES: 130083

molex

CABLE REEL – INDUSTRIAL DUTY 25' #12-3 SOOW W/ OUTLET BOX W/ (2) NEMA 5-15 DUPLEX RECEPTACLES

PRODUCT CUSTOMER DRAWING

DOCUMENT NUMBER	DOC TYPE	DOC PART	REVISION
1300830269	PSD	000	A

MATERIAL NUMBER	CUSTOMER	SHEET NUMBER
SEE TABLE	GENERAL MARKET	1 OF 1

FORMAT: IN-master-tb-prod-C
REVISION: D
DATE: 2020/01/14