CATALOG NUMBER	MATERIAL NUMBER	CONDUIT SIZE	N.P.T. FITTING SIZE	LENGTH "M"	DIAMETER "A" *REF.*	LENGTH "B" *REF.*	LENGTH "C" *REF.*	PRODUCT SELECTION NUMBER	UL LISTED	CSA APRVD
36440	1300960056	3/8"	1/2"	3.875±0.500 / 98.43±12.70	1.0 / 25	1.13 / 28.7	0.63 / 16.0	STB038P	YES	YES
36370	1300960034	1/2"	1/2"	4.625±0.500 / 117.48±12.70	1.2 / 30	1.25 / 31.8	0.63 / 16.0	STB050P		
36371	1300960036	3/4"	3/4"	5.750±0.500 / 146.05±12.70	1.4 / 36	1.50 / 38.1	0.63 / 16.0	STB075P		
36372	1300960037	1"	1"	7.000±0.500 / 177.80±12.70	1.7 / 43	1.81 / 45.9	0.75 / 19.1	STB100P		
36373	1300960038	1-1/4"	1-1/4"	8.125±1.000 / 206.38±25.40	2.0 / 51	2.31 / 58.7	0.63 / 16.0	STB125P		
36374	1300960039	1-1/2"	1-1/2"	9.250±1.000 / 234.95±25.40	2.5 / 64	2.63 / 66.8	0.63 / 16.0	STB150P		
36375	1300960040	2"	2"	11.500±1.000 / 292.10±25.40	3.0 / 76	3.19 / 81.0	0.69 / 17.5	STB200P		
37030	1300960065	2-1/2"	2-1/2"	11.250±1.000 / 285.75±25.40	3.6 / 91	3.94 / 100.1	1.06 / 26.9	STB250P		

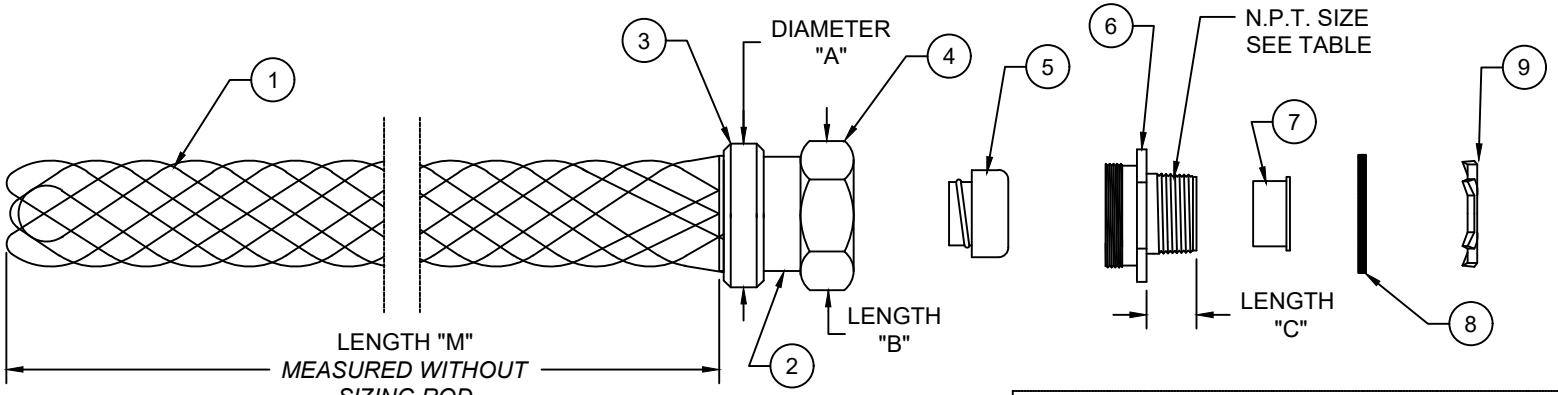

ASSEMBLED GRIP

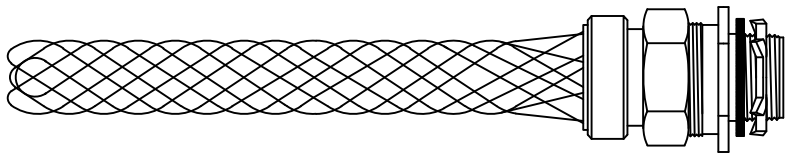

INSTRUCTIONS INCLUDED WITH GRIP

ITEM	DESCRIPTION	MATERIAL
1	WIRE MESH	STAINLESS STEEL
2	INNER RING	ZINC PLATED STEEL
3	OUTER RING	ALUMINUM
4	COMPRESSION NUT	ZINC PLATED STEEL OR MALLEABLE IRON
5	FERRULE	ZINC PLATED STEEL OR ALUMINUM
6	THREADED BODY	ZINC PLATED STEEL OR MALLEABLE IRON
7	THROAT INSULATION	PLASTIC
8	GASKET	NEOPRENE
9	LOCK NUT	ZINC PLATED STEEL

DOCUMENT STATUS	P1	RELEASE DATE	2023/02/16 05:36:36

THIS DRAWING CONTAINS INFORMATION THAT IS PROPRIETARY TO MOLEX ELECTRONIC TECHNOLOGIES, LLC AND SHOULD NOT BE USED WITHOUT WRITTEN PERMISSION

FUNCTIONAL SYMBOLS: FA=0, FC=0, FP=0

DIVISIONAL SYMBOLS

DIMENSION UNITS: INCH/MM | SCALE: NTS

GENERAL TOLERANCES (UNLESS SPECIFIED)

	mm	INCH
4 PLACES	± ----	± ----
3 PLACES	± ----	± 0.005
2 PLACES	± 0.13	± 0.01
1 PLACE	± 0.25	± 0.02
0 PLACES	± ----	± ----
ANGULAR TOL ± 0.5 °		

DRAFT WHERE APPLICABLE MUST REMAIN WITHIN DIMENSIONS

CURRENT REV DESC: OBSOLETED PART NUMBER AS PER PCN#510808

EC NO: 736640

DRWN:	SUGEEB	2022/12/21
CHK'D:	LIKITV	2023/02/14
APPR:	GGA	2023/02/16

INITIAL REVISION:

DRWN:	HRUIZ01	2014/09/22
APPR:	JFMURPHY	2015/04/27

THIRD ANGLE PROJECTION | DRAWING: A-SIZE | SERIES: 130096

molex

STRAIN RELIEF

LIQUID TIGHT CONDUIT STRAIGHT-MALE

PRODUCT CUSTOMER DRAWING

DOCUMENT NUMBER	DOC TYPE	DOC PART	REVISION
SD-130096-100	PSD	001	A1

MATERIAL NUMBER	CUSTOMER	SHEET NUMBER
SEE TABLE	GENERAL MARKET	1 OF 1

FORMAT: ACAD-tb-prod-A
REVISION: C
DATE: 2022/10/04