CATALOG NUMBER	MATERIAL NUMBER	CABLE RANGE	LENGTH "M"	N.P.T. FITTING SIZE	FORM SIZE	LENGTH "A" *REF.*	UL LISTED	CSA APPROVED
5522M	1300990068	.187-.250 / 4.75-6.35	4.50±0.50 / 114.3±12.7	1/2	2	0.500 / 12.70	NO	YES
5524M	1300990072	.250-.312 / 6.35-7.92	4.50±0.50 / 114.3±12.7					
5526M	1300990076	.312-.375 / 7.92-9.53	4.50±0.50 / 114.3±12.7					
5528M	1300990080	.375-.437 / 9.53-11.10	5.50±0.50 / 139.7±12.7					
5530M	1300990084	.437-.500 / 11.10-12.70	6.50±0.50 / 165.1±12.7					
* 5532M	1300990088	.500-.562 / 12.70-14.27	6.75±0.50 / 171.5±12.7					
* 5534M	1300990090	.562-.625 / 14.27-15.88	6.75±0.50 / 171.5±12.7					
5620M	1300990153	.187-.250 / 4.75-6.35	4.25±0.50 / 108.0±12.7	3/4	3	0.562 / 14.27	NO	YES
5622M	1300990157	.250-.375 / 6.35-9.53	4.25±0.50 / 108.0±12.7					
5624M	1300990161	.375-.437 / 9.53-11.10	6.00±0.50 / 152.4±12.7					
5536M	1300990092	.437-.562 / 11.10-14.27	6.00±0.50 / 152.4±12.7					
5538M	1300990096	.500-.625 / 12.70-15.88	6.75±0.50 / 171.5±12.7					
5540M	1300990100	.562-.687 / 14.27-17.45	9.00±1.00 / 228.6±25.4					
5542M	1300990104	.625-.750 / 15.88-19.05	9.00±1.00 / 228.6±25.4					
* 5544M	1300990108	.687-.812 / 17.45-20.62	9.50±1.00 / 241.3±25.4					
5546M	1300990110	.437-.562 / 11.10-14.27	6.00±0.50 / 152.4±12.7	1	4	0.687 / 17.45	NO	YES
5548M	1300990113	.500-.625 / 12.70-15.88	6.75±0.50 / 171.5±12.7					
5550M	1300990116	.562-.687 / 14.27-17.45	9.00±1.00 / 228.6±25.4					
5552M	1300990119	.625-.750 / 15.88-19.05	9.00±1.00 / 228.6±25.4					
5554M	1300990123	.687-.812 / 17.45-20.62	9.50±1.00 / 241.3±25.4					
5556M	1300990127	.750-.875 / 19.05-22.23	9.50±1.00 / 241.3±25.4					
5558M	1300990131	.812-.937 / 20.62-23.80	8.75±1.00 / 222.3±25.4					
5560M	1300990134	.875-1.000 / 22.23-25.40	8.75±1.00 / 222.3±25.4					

* CABLE JACKET MAY HAVE TO BE STRIPPED FOR CLEARANCE.

ASSEMBLED GRIP

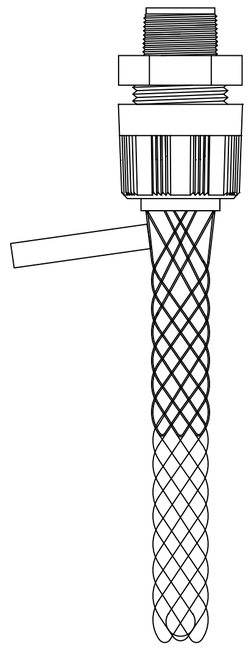

INSTRUCTIONS INCLUDED WITH GRIP

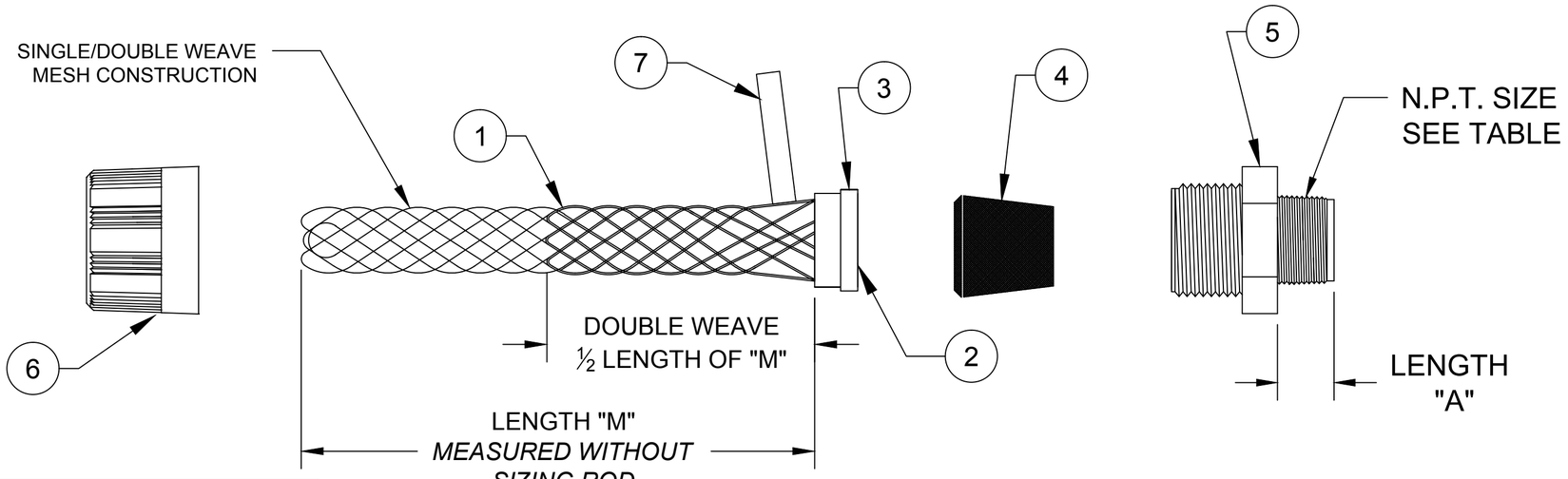

ITEM	DESCRIPTION	MATERIAL
1	WIRE MESH	STAINLESS STEEL
2	INNER RING	STAINLESS STEEL
3	OUTER RING	STAINLESS STEEL
4	GROMMET	NITRILE PVC
5	THREADED BODY	NYLON (GRAY)
6	COMPRESSION NUT	NYLON (GRAY)
7	LABEL	MYLAR

RELEASE SALES DWG
EC NO: IPG2014-2068
DRWN: HRUIZ01 2014/09/29
CHKD: HKNEELAN 2014/09/29
APPR: JFMURPHY 2014/11/18
DESCRIPTION
A
REV

QUALITY SYMBOL
▼=0
Ⓒ=0

GENERAL TOLERANCES (UNLESS SPECIFIED)

	mm	INCH
4 PLACES	±---	±---
3 PLACES	±---	±.005
2 PLACES	±.13	±.010
1 PLACE	±.25	±.020
ANGULAR ±1/2°		

DRAFT WHERE APPLICABLE MUST REMAIN WITHIN DIMENSIONS

DIMENSION STYLE: INCH/MM
SCALE: NTS
DESIGN UNITS: INCH
THIRD ANGLE PROJECTION

DRAWN BY: HRUIZ01 DATE: 2014/09/29
CHECKED BY: HKNEELAN DATE: 2014/09/29
APPROVED BY: JFMURPHY DATE: 2014/11/18

TITLE
STRAIN RELIEF
MAX-LOC METALLIC
STRAIGHT MALE

MOLEX INCORPORATED

MATERIAL NO.: SEE TABLE
DOCUMENT NO.: SD-130099-003
SHEET NO.: 1 0F 1
SIZE: C

THIS DRAWING CONTAINS INFORMATION THAT IS PROPRIETARY TO MOLEX INCORPORATED AND SHOULD NOT BE USED WITHOUT WRITTEN PERMISSION