ORDER NO.	WOODHEAD NO.	COLOR
130141-0030	1534	YELLOW

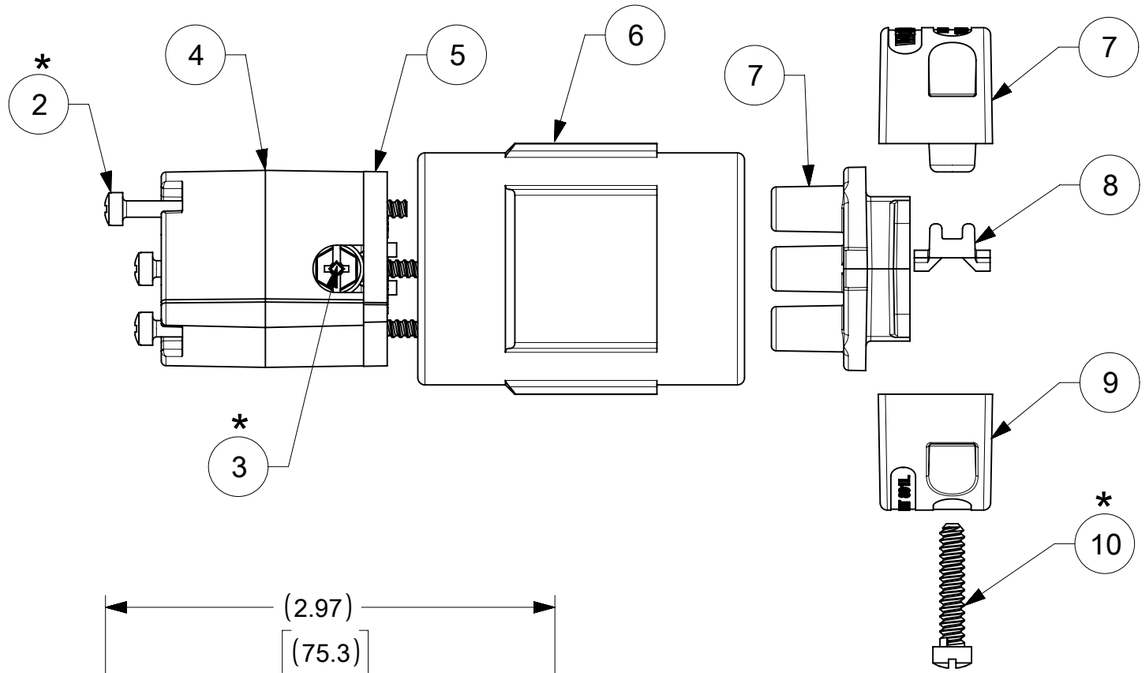

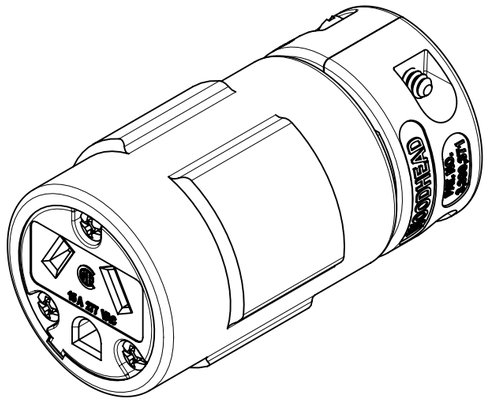

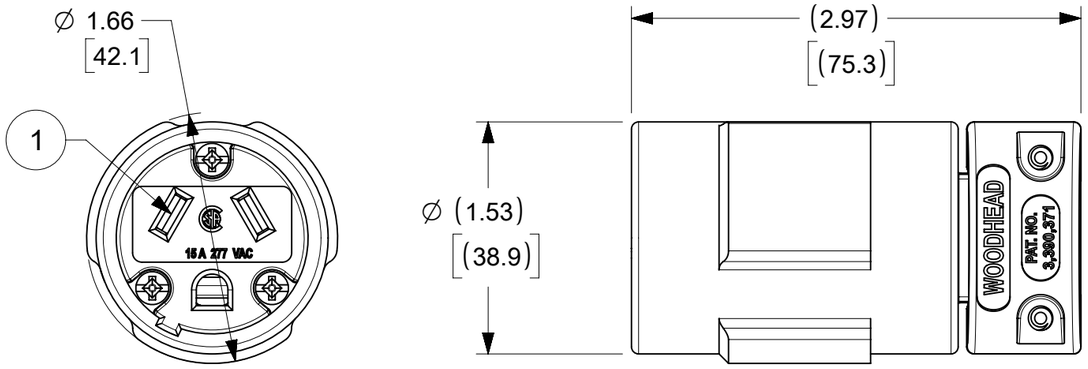

WIRING TERMINATION

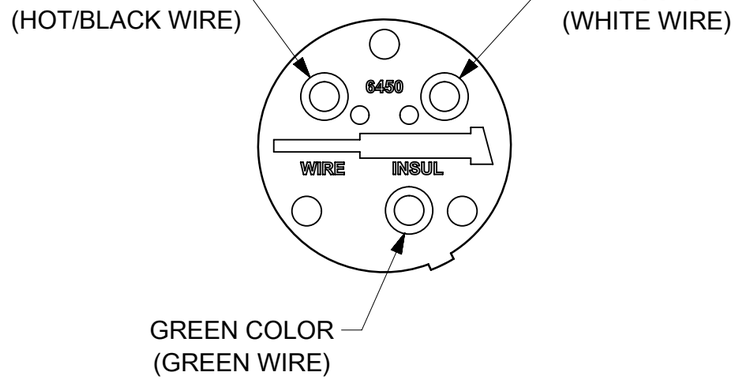

* FOR SCREW TORQUE, SEE ASSEMBLY INSTRUCTIONS

ITEM NO.	DESCRIPTIONS	MATERIAL	QTY.
1	CLIP ASSEMBLY	BRASS, NICKEL PLATED	3
2	RETAINING SCREWS	STAINLESS STEEL	3
3	TERMINAL SCREWS/CLAMP ASSEMBLY	BRASS, ZINC PLATED	3
4	INSERT	NYLON	1
5	TERMINAL COVER	POLYCARBONATE	1
6	CONNECTOR HUSK	RUBBER	1
7	CLAMP SUPPORT	NYLON	1
8	CLAMP CORD MALE	NYLON	1
9	CLAMP CORD INSERT	NYLON	1
10	CLAMP CORD FEMALE	NYLON	1
11	RETAINING SCREWS	STEEL ZINC PLATED	2

DOCUMENT STATUS	P1	RELEASE DATE	2020/09/02 23:00:13

THIS DRAWING CONTAINS INFORMATION THAT IS PROPRIETARY TO MOLEX ELECTRONIC TECHNOLOGIES, LLC AND SHOULD NOT BE USED WITHOUT WRITTEN PERMISSION

SYMBOLS: ▽ = 0, ▽ = 0, ▽ = 0, ▽ = 0, ▼ = 0, ▽ = 0, ☒ = 0, ■ = 0, ▽ = 0

DIMENSION UNITS: INCH/MM | SCALE: NTS

GENERAL TOLERANCES (UNLESS SPECIFIED)

	MM	INCH
4 PLACES	±	±
3 PLACES	±	± 0.005
2 PLACES	± 0.13	± 0.01
1 PLACE	± 0.25	± 0.02
0 PLACES	±	±
ANGULAR TOL	± 0.5 °	

DRAFT WHERE APPLICABLE MUST REMAIN WITHIN DIMENSIONS

CURRENT REV DESC: NEW RELEASE

EC NO: 643354
DRWN: VHANDI 2019/06/14
CHK'D: DNGUYEN62 2020/06/29
APPR: HKNEELAND 2020/09/02

INITIAL REVISION:
DRWN: VHANDI 2019/06/14
APPR: HKNEELAND 2020/09/02

THIRD ANGLE PROJECTION | DRAWING: B-SIZE | SERIES: 130141

molex

SUPER-SAFEWAY CONN NEMA 7-15 2P3W

PRODUCT CUSTOMER DRAWING

DOCUMENT NUMBER	DOC TYPE	DOC PART	REVISION
1301410030	PSD	000	A

MATERIAL NUMBER	CUSTOMER	SHEET NUMBER
SEE TABLE	GENERAL MARKET	1 OF 1

FORMAT: Eng-lega-master-tb-prod-B
REVISION: D
DATE: 2018/01/18