MATERIAL NO.	ENGINEERING NO.	DESCRIPTION	PRODUCT LENGTH
1301430121	14W33A123	14W33 W25FT 12-3-SO 15W33	25 FT +12.0/-0.0 IN
1301430124	14W33A143	14W33 W25FT 14-3-SO 15W33	25 FT +12.0/-0.0 IN
1301430125	14W33B123	14W33 W50FT 12-3-SO 15W33	50 FT +24.0/-0.0 IN
1301430129	14W33D123	14W33 W100FT 12-3SO 15W33	100 FT +24.0/-0.0 IN
1301430131	14W33D143	14W33 W100FT 14-3SO 15W33	100 FT +24.0/-0.0 IN

NEMA 5-20; 20A 125V; 2-POLE/3-WIRE

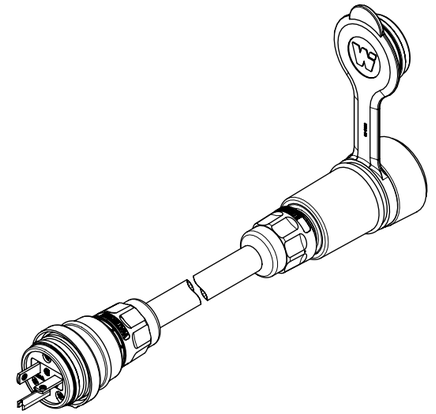

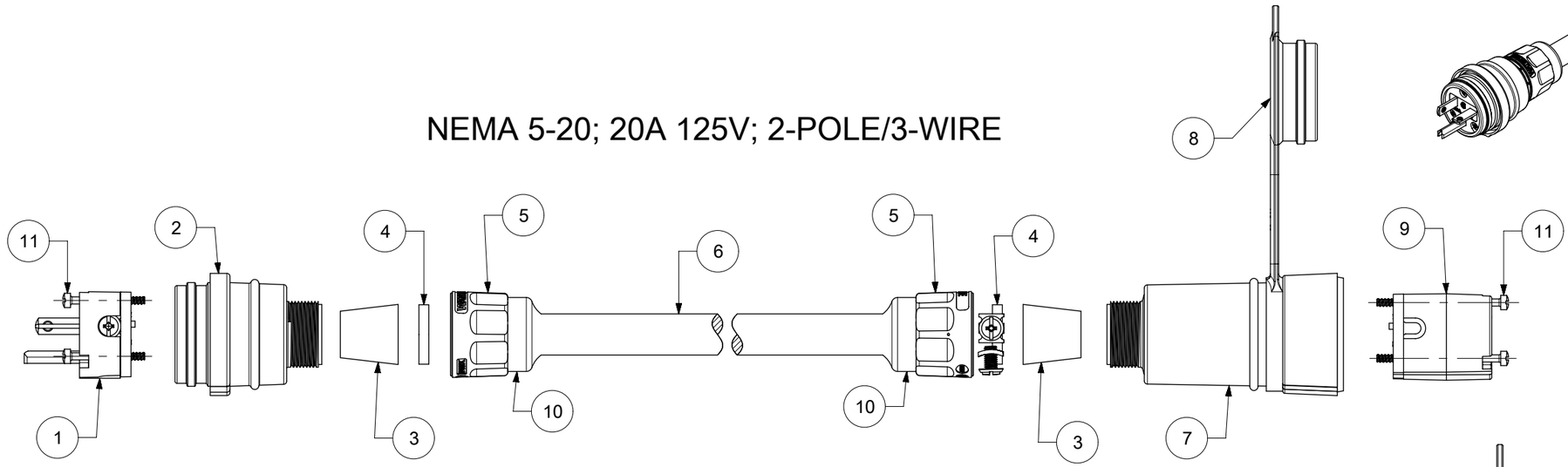

ITEM NO.	DESCRIPTION	MATERIAL	QTY.
1	MALE INSERT ASSY.	NYLON, POLYCARBONATE, BRASS PLATING - NICKEL OR ZINC	1
2	WATERTITE - MALE HUSK	SILICONE	1
3	GROMMET	RUBBER	2
4	FRICTION RING	NYLON	2
5	COMPRESSION NUT YELLOW	NYLON	2
6	YELLOW SOOW CORD	COPPER WIRE	1
7	WATERTITE - FEMALE HUSK	SILICONE	1
8	CLOSURE CAP YELLOW	SILICONE	1
9	FEMALE INSERT ASSY.	NYLON, POLYCARBONATE, BRASS PLATING - NICKEL OR ZINC	1
10	CABLE GLOVE	SILICONE	2
11	RETAINING SCREW	STAINLESS STEEL	6

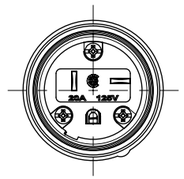

14W33
FACE VIEW OF
MALE INSERT

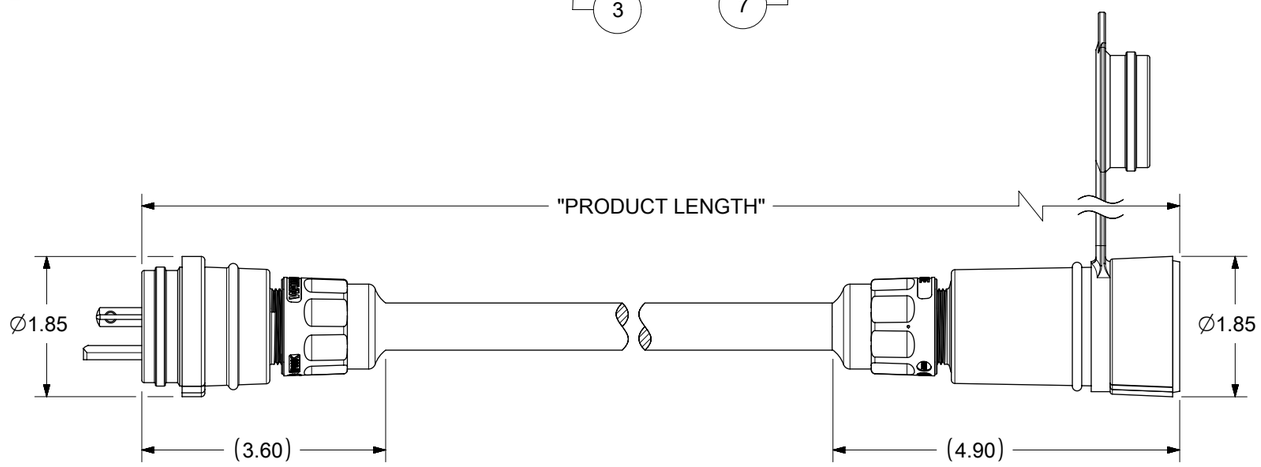

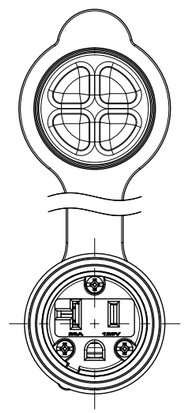

15W33
FACE VIEW OF
FEMALE INSERT

DOCUMENT STATUS	P1	RELEASE DATE	2023/01/04 04:25:05

THIS DRAWING CONTAINS INFORMATION THAT IS PROPRIETARY TO MOLEX ELECTRONIC TECHNOLOGIES, LLC AND SHOULD NOT BE USED WITHOUT WRITTEN PERMISSION

DIMENSION UNITS	SCALE
INCH	NTS

GENERAL TOLERANCES (UNLESS SPECIFIED)

ANGULAR TOL	± °
4 PLACES	±
3 PLACES	±
2 PLACES	±
1 PLACE	±
0 PLACES	±

DRAFT WHERE APPLICABLE MUST REMAIN WITHIN DIMENSIONS

CURRENT REV DESC: REMOVED OBSOLETED PART NUMBER AS PER PCN#511695.

EC NO: 730178

DRWN:	SANTHN	2022/11/30
CHK'D:	GGA	2023/01/04
APPR:	GGA	2023/01/04
INITIAL REVISION:		
DRWN:	PPURSUTANDEL	2019/07/04
APPR:	HKNEELAND	2020/05/19

THIRD ANGLE PROJECTION | DRAWING: B-SIZE | SERIES: 130143

molex

WATERTITE CORDSET
PLUG AND CONNECTOR WITH CORD

PRODUCT CUSTOMER DRAWING

DOCUMENT NUMBER	DOC TYPE	DOC PART	REVISION
1301430121	PSD	000	A1

MATERIAL NUMBER	CUSTOMER	SHEET NUMBER
SEE TABLE	GENERAL MARKET	1 OF 1

FORMAT: master-tb-prod-B
REVISION: J1
DATE: 2021/05/01