ORDER NO.	WOODHEAD NO.	COLOR
130144-0023	4720	BLACK
130144-0024	4720YL	YELLOW

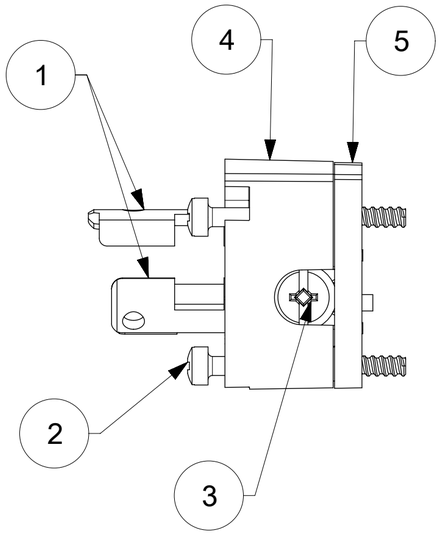

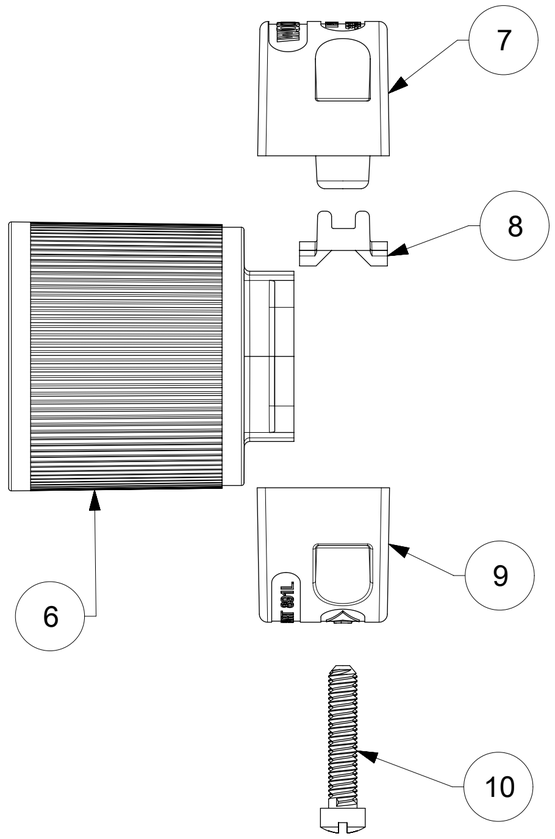

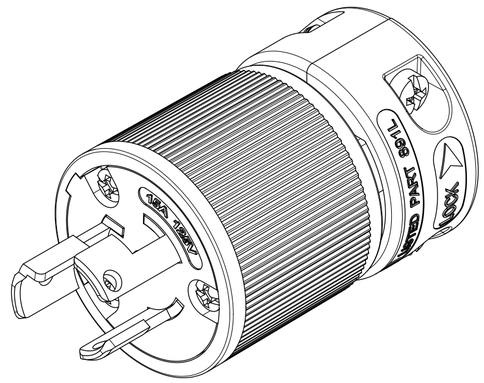

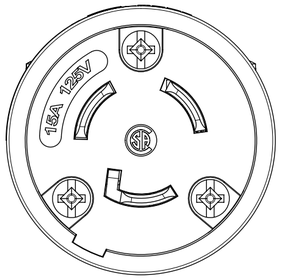

FACE VIEW

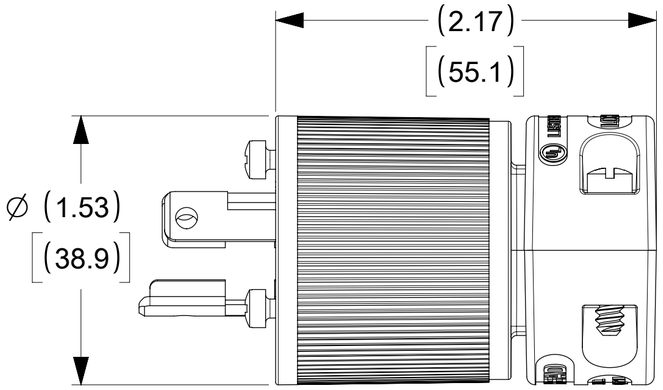

WIRING TERMINATION

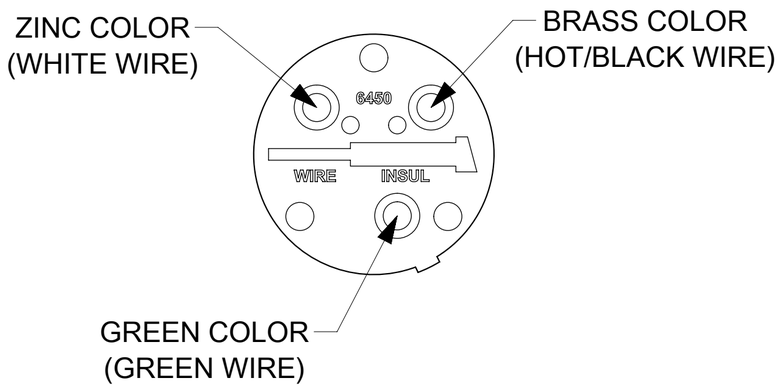

ITEM NO.	DESCRIPTIONS	MATERIAL	QTY.
1	BLADES	BRASS, NICKEL PLATED	3
2	RETAINING SCREWS	STAINLESS STEEL	3
3	TERMINAL SCREWS/CLAMP ASSEMBLY	BRASS, ZINC PLATED	3
4	INSERT	NYLON	1
5	TERMINAL COVER	POLYCARBONATE	1
6	HOUSING	NYLON	1
7	CLAMP CORD MALE	NYLON	1
8	CLAMP CORD INSERT	NYLON	1
9	CLAMP CORD FEMALE	NYLON	1
10	RETAINING SCREWS	STEEL, ZINC PLATED	2

DOCUMENT STATUS	P1	RELEASE DATE	2020/02/05 17:39:53

THIS DRAWING CONTAINS INFORMATION THAT IS PROPRIETARY TO MOLEX ELECTRONIC TECHNOLOGIES, LLC AND SHOULD NOT BE USED WITHOUT WRITTEN PERMISSION

SYMBOLS: FN = 0; EC = 0; EP = 0; S = 0; ▼ = 0; C = 0; ☒ = 0; ■ = 0; V = 0

DIMENSION UNITS: INCH[MM] | SCALE: NTS

GENERAL TOLERANCES (UNLESS SPECIFIED)

	MM	INCH
4 PLACES	±	±
3 PLACES	±	±
2 PLACES	±	±
1 PLACE	±	±
0 PLACES	±	±
ANGULAR TOL	± °	

DRAFT WHERE APPLICABLE MUST REMAIN WITHIN DIMENSIONS

CURRENT REV DESC: NEW RELEASE

EC NO: 621724
DRWN: DSOPPIN 2019/03/13
CHK'D: DNGUYEN62 2019/11/19
APPR: HKNEELAND 2020/02/05

INITIAL REVISION:
DRWN: DSOPPIN 2019/03/13
APPR: HKNEELAND 2020/02/05

THIRD ANGLE PROJECTION | DRAWING: C-SIZE | SERIES: 130144

molex

SAFEWAY PLUG 2P3W L5-15

PRODUCT CUSTOMER DRAWING

DOCUMENT NUMBER	DOC TYPE	DOC PART	REVISION
1301440023	PSD	000	A

MATERIAL NUMBER	CUSTOMER	SHEET NUMBER
SEE TABLE	GENERAL MARKET	1 OF 1

FORMAT: Eng-lega-master-tb-prod-C
REVISION: D
DATE: 2018/01/18