ORDER NO.	WOODHEAD NO.	COLOR
130144-0025	4729	BLACK
130144-0026	4729YL	YELLOW

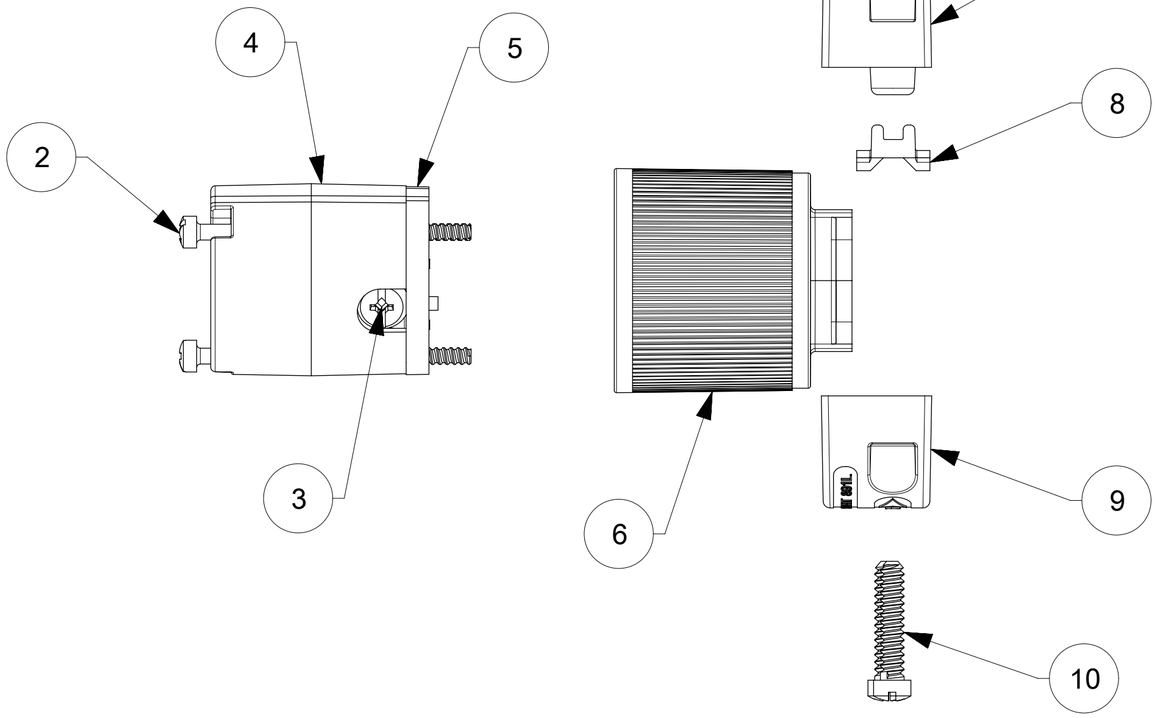

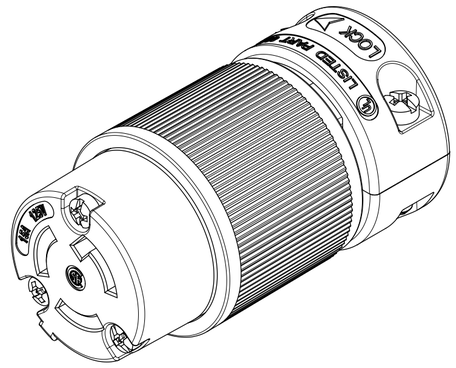

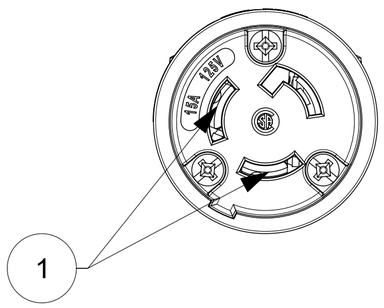

FACE VIEW

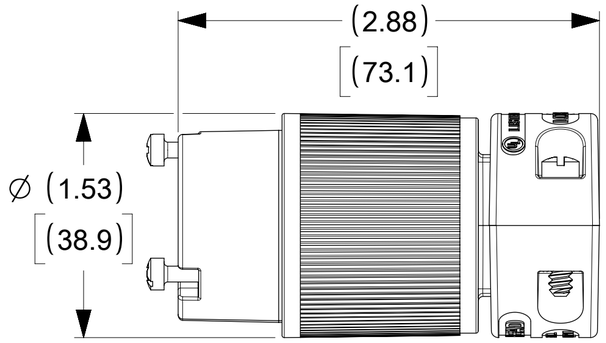

WIRING TERMINATION

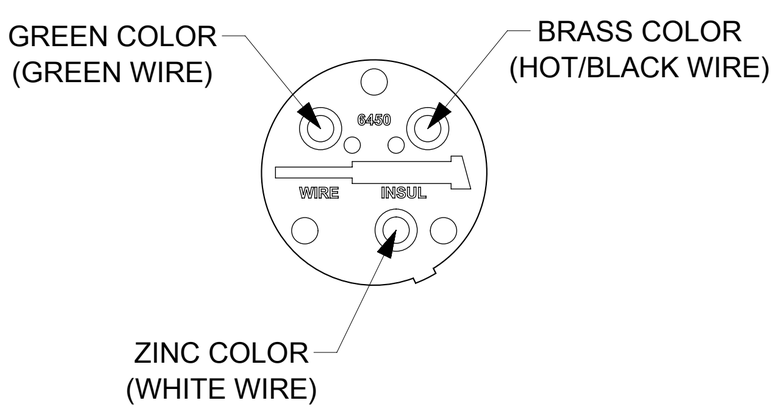

ITEM NO.	DESCRIPTIONS	MATERIAL	QTY.
1	BLADES	BRASS, NICKEL PLATED	3
2	RETAINING SCREWS	STAINLESS STEEL	3
3	TERMINAL SCREWS/CLAMP ASSEMBLY	BRASS, ZINC PLATED	3
4	INSERT	NYLON	1
5	TERMINAL COVER	POLYCARBONATE	1
6	HOUSING	NYLON	1
7	CLAMP CORD MALE	NYLON	1
8	CLAMP CORD INSERT	NYLON	1
9	CLAMP CORD FEMALE	NYLON	1
10	RETAINING SCREWS	STEEL, ZINC PLATED	2

DOCUMENT STATUS	P1	RELEASE DATE	2020/02/05 17:39:53

THIS DRAWING CONTAINS INFORMATION THAT IS PROPRIETARY TO MOLEX ELECTRONIC TECHNOLOGIES, LLC AND SHOULD NOT BE USED WITHOUT WRITTEN PERMISSION

SYMBOLS: FA = 0, FC = 0, FD = 0, S = 0, ▼ = 0, C = 0, ☒ = 0, ■ = 0, V = 0

DIMENSION UNITS: INCH[MM] | SCALE: NTS

GENERAL TOLERANCES (UNLESS SPECIFIED)

	MM	INCH
4 PLACES	±	±
3 PLACES	±	±
2 PLACES	±	±
1 PLACE	±	±
0 PLACES	±	±
ANGULAR TOL	± °	

DRAFT WHERE APPLICABLE MUST REMAIN WITHIN DIMENSIONS

CURRENT REV DESC: NEW RELEASE

EC NO: 621724
DRWN: VBASUTHKARP 2019/03/20
CHK'D: DNGUYEN62 2019/11/19
APPR: HKNEELAND 2020/02/05

INITIAL REVISION:
DRWN: VBASUTHKARP 2019/03/20
APPR: HKNEELAND 2020/02/05

molex

SAFEWAY CONNECTOR 2P3W L5-15

PRODUCT CUSTOMER DRAWING

DOCUMENT NUMBER	DOC TYPE	DOC PART	REVISION
1301440025	PSD	000	A

THIRD ANGLE PROJECTION	DRAWING	SERIES	MATERIAL NUMBER	CUSTOMER	SHEET NUMBER
	C-SIZE	130144	SEE TABLE	GENERAL MARKET	1 OF 1

FORMAT: Eng-lega-master-tb-prod-C
REVISION: D
DATE: 2018/01/18