ORDER NO.	WOODHEAD NO.	COLOR
130144-0067	5669	BLACK

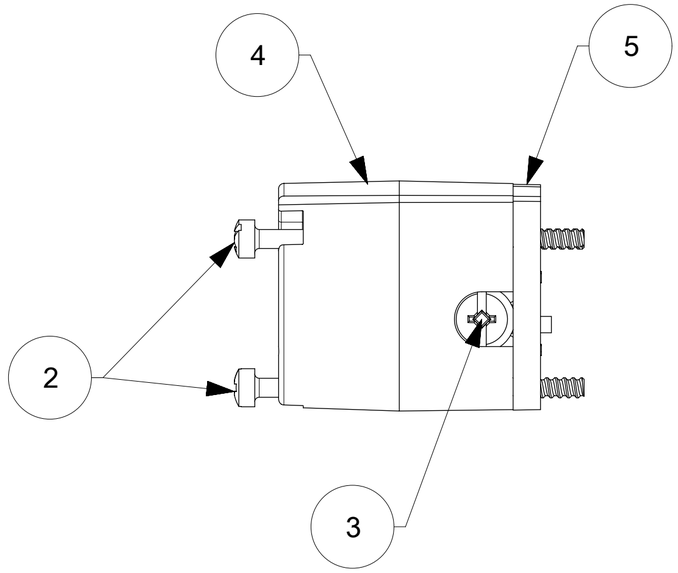

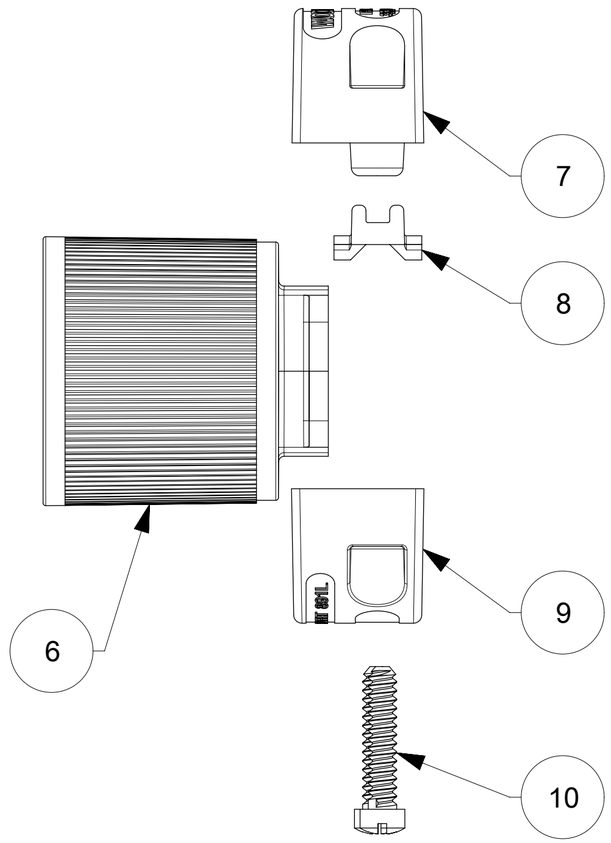

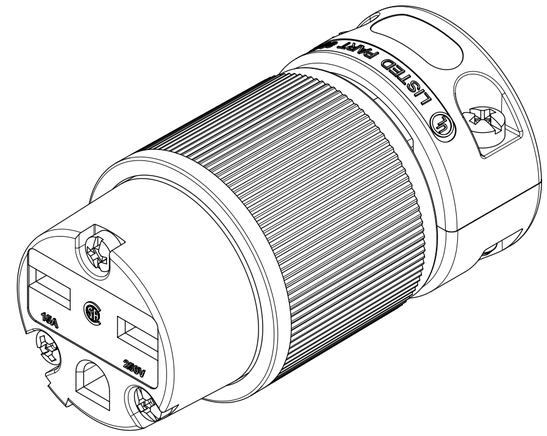

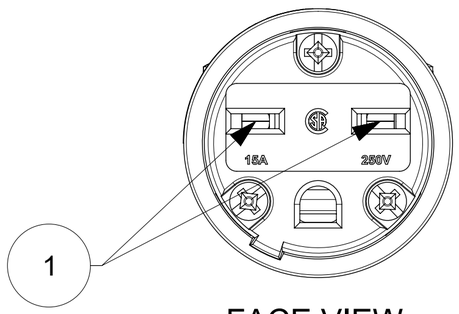

FACE VIEW

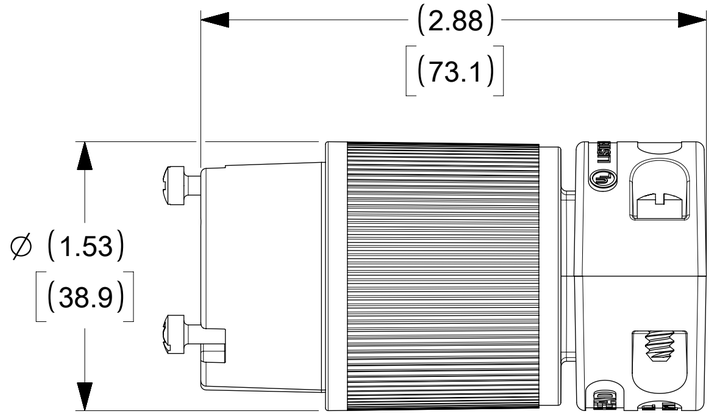

WIRING TERMINATION

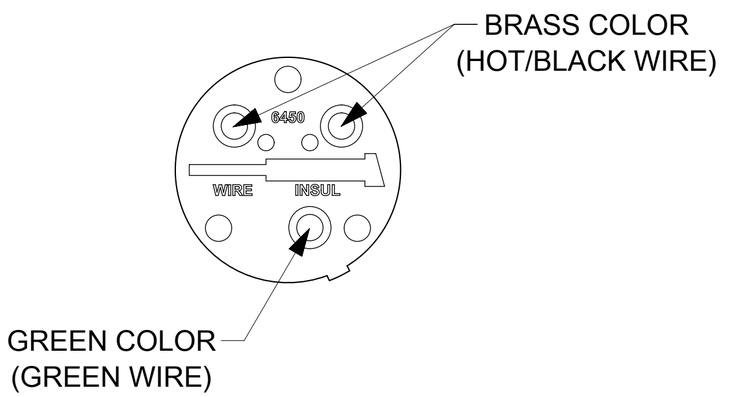

ITEM NO.	DESCRIPTIONS	MATERIAL	QTY.
1	BLADES	BRASS	3
2	RETAINING SCREWS	STAINLESS STEEL	3
3	TERMINAL SCREWS/CLAMP ASSEMBLY	BRASS, ZINC PLATED	3
4	INSERT	NYLON	1
5	TERMINAL COVER	POLYCARBONATE	1
6	HOUSING	NYLON	1
7	CLAMP CORD MALE	NYLON	1
8	CLAMP CORD INSERT	NYLON	1
9	CLAMP CORD FEMALE	NYLON	1
10	RETAINING SCREWS	STEEL, ZINC PLATED	2

DOCUMENT STATUS	P1	RELEASE DATE	2020/02/05 18:17:30

THIS DRAWING CONTAINS INFORMATION THAT IS PROPRIETARY TO MOLEX ELECTRONIC TECHNOLOGIES, LLC AND SHOULD NOT BE USED WITHOUT WRITTEN PERMISSION

SYMBOLS: A = 0, C = 0, F = 0, S = 0, = 0, C = 0, = 0, = 0, = 0

DIMENSION UNITS: INCH[MM] | SCALE: NTS

GENERAL TOLERANCES (UNLESS SPECIFIED)

	MM	INCH
4 PLACES	±	±
3 PLACES	±	±
2 PLACES	±	±
1 PLACE	±	±
0 PLACES	±	±
ANGULAR TOL	± °	

DRAFT WHERE APPLICABLE MUST REMAIN WITHIN DIMENSIONS

CURRENT REV DESC: NEW RELEASE

EC NO: 621092
DRWN: VBASUTHKARP 2019/02/07
CHK'D: DNGUYEN62 2019/10/30
APPR: HKNEELAND 2020/02/05

INITIAL REVISION:
DRWN: VBASUTHKARP 2019/02/07
APPR: HKNEELAND 2020/02/05

THIRD ANGLE PROJECTION | DRAWING: C-SIZE | SERIES: 130144

molex

SAFEWAY CONNECTOR 2P3W 6-15

PRODUCT CUSTOMER DRAWING

DOCUMENT NUMBER	DOC TYPE	DOC PART	REVISION
1301440067	PSD	000	A

MATERIAL NUMBER	CUSTOMER	SHEET NUMBER
SEE TABLE	GENERAL MARKET	1 OF 1

FORMAT: Eng-lega-master-tb-prod-C
REVISION: D
DATE: 2018/01/18