ORDER NO.	WOODHEAD NO.	COLOR
130146-0185	14W47-P	YELLOW
130146-0186	14W47BLK-P	BLACK

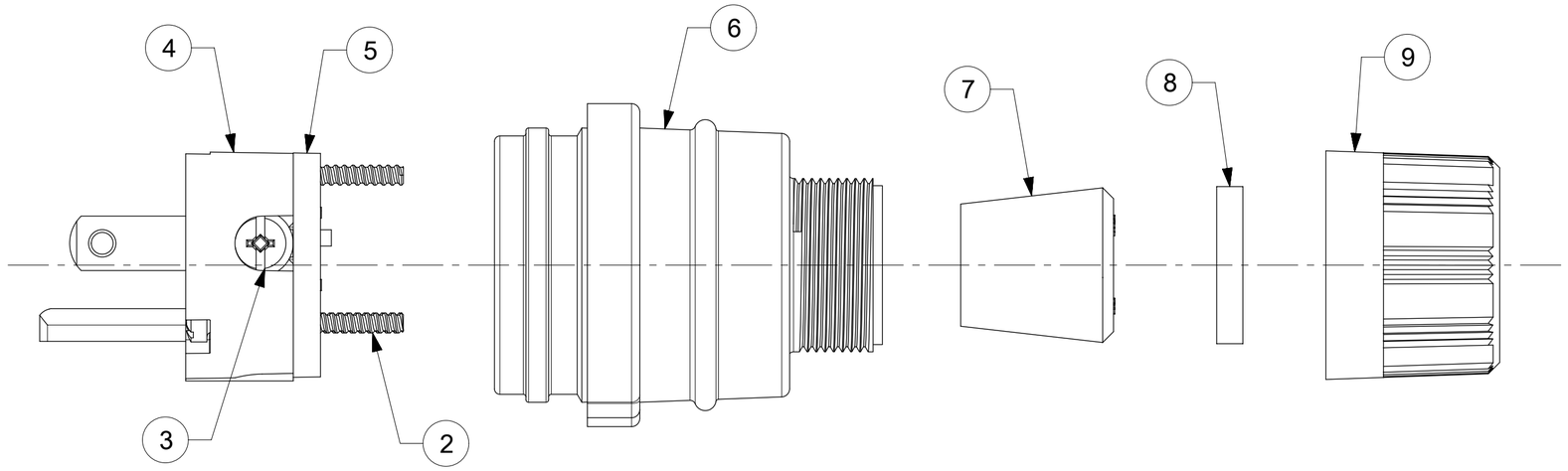

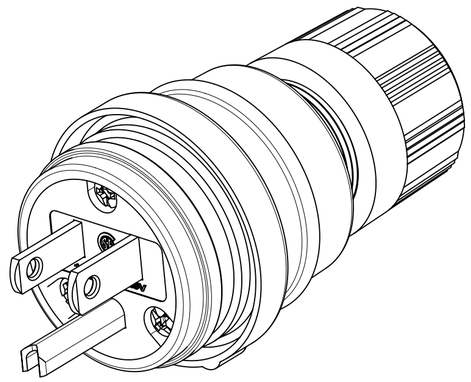

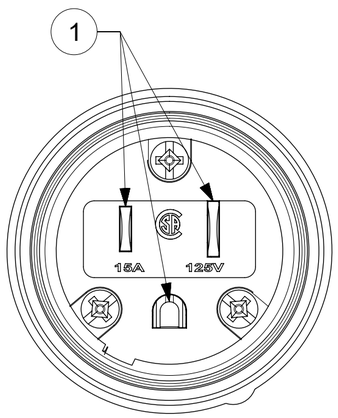

FACE VIEW

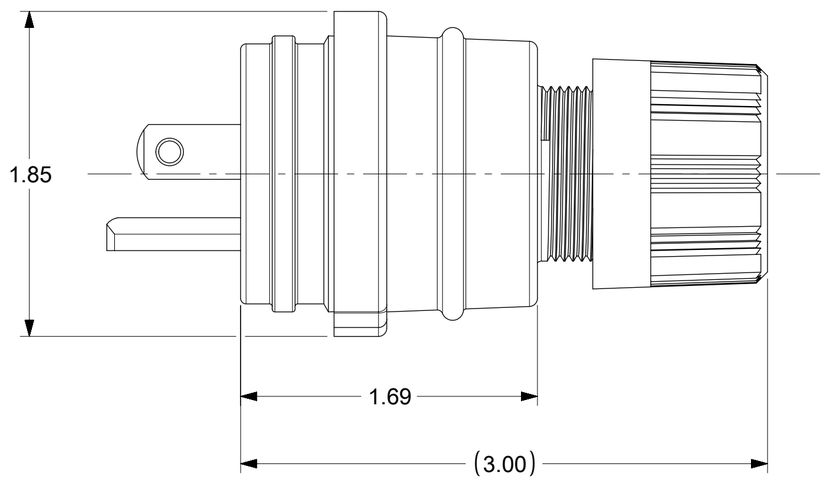

ITEM NO.	DESCRIPTIONS	MATERIAL	QTY.
1	BLADES	BRASS	3
2	RETAINING SCREWS	STAINLESS STEEL	3
3	TERMINAL SCREWS	BRASS, ZINC PLATED	3
4	INSERT	NYLON	1
5	TERMINAL COVER	POLYCARBONATE	1
6	HOUSING	RUBBER WITH NYLON THREAD	1
7	GROMMETS	RUBBER	5
8	FRICTION RING	NYLON	1
9	COMPRESSION NUT	NYLON	1

DOCUMENT STATUS	P1	RELEASE DATE	2019/03/18 22:02:32

NOTES:
1. SEE INSTRUCTION SHEET NUMBER 1301414770 FOR PRODUCT SPECIFICATION.
2. CABLE RANGE FROM 0.375" TO 0.625"

SYMBOLS	DIMENSION UNITS	SCALE
= 0	INCH	NTS
= 0	GENERAL TOLERANCES (UNLESS SPECIFIED)	
= 0	ANGULAR TOL ± 0.5 °	
= 0	4 PLACES ±	
= 0	3 PLACES ± 0.005	
= 0	2 PLACES ± 0.01	
= 0	1 PLACE ± 0.02	
= 0	0 PLACES ±	
= 0	DRAFT WHERE APPLICABLE MUST REMAIN WITHIN DIMENSIONS	
= 0		

THIS DRAWING CONTAINS INFORMATION THAT IS PROPRIETARY TO MOLEX ELECTRONIC TECHNOLOGIES, LLC AND SHOULD NOT BE USED WITHOUT WRITTEN PERMISSION

CURRENT REV DESC: RELEASED

EC NO: 613379
DRWN: ABABU01 2018/11/12
CHK'D: DNGUYEN62 2019/03/13
APPR: HKNEELAND 2019/03/18

INITIAL REVISION:
DRWN: ABABU01 2018/11/12
APPR: HKNEELAND 2019/03/18

THIRD ANGLE PROJECTION | DRAWING: C-SIZE | SERIES: 130146

molex

WATERTITE PLUG, 5-15P

PRODUCT CUSTOMER DRAWING

DOCUMENT NUMBER	DOC TYPE	DOC PART	REVISION
1301460185	PSD	000	A

MATERIAL NUMBER	CUSTOMER	SHEET NUMBER
SEE TABLE	GENERAL MARKET	1 OF 1

FORMAT: lb-prod-C
REVISION: H
DATE: 2018/01/18