PRODUCT SPECIFICATION

Document Title: Wireless Charging Coil - High Frequency Receive Product Specification

Revision	Responsibility	Date
Rev B	Zhou Tao	2016/12/27

1461798021 Wireless Charging Coil - High Frequency Receive

1.0 SCOPE

This Product Specification covers the environmental and mechanical performance requirements for Wireless Charging Coil – High Frequency Receive.

2.0 PRODUCT DESCRIPTION

2.1 Product Name

Wireless Charging Coil - High Frequency Receive

2.2 Product Description

This high efficiency coil is designed for high performance wearable or any other device / accessory requiring up to 2.5W power receive. Standard FPCB construction enables integration with other electronics, high durability, and consistent performance.

2.3 Series No.

146179

2.4 BOM

Molex PN	Part Description
1461798021	Wireless Charging Coil - High Frequency Receive

3.0 DESIGN AND CONSTRUCTION

For details, please refer to the 2D sales drawings at www.molex.com

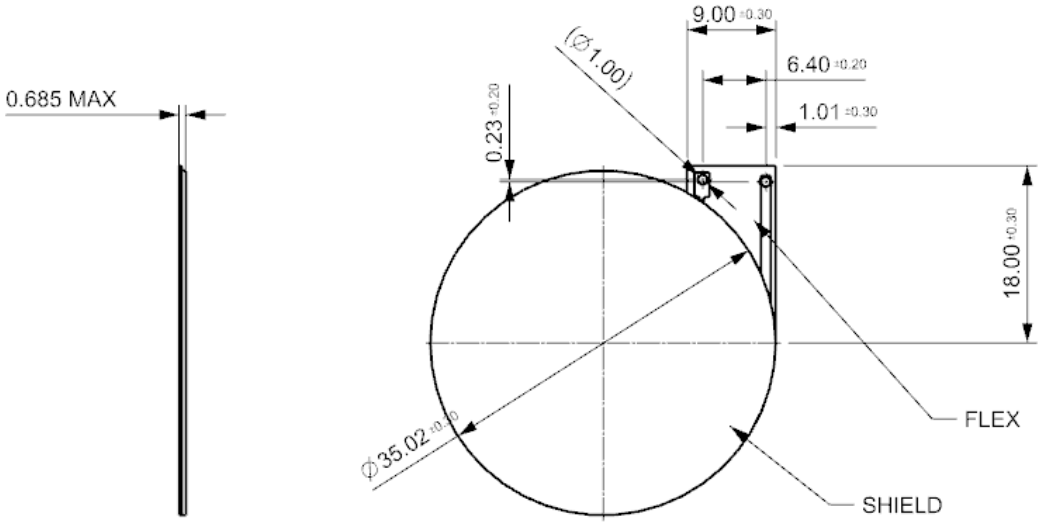

4.0 ELECTRICAL REQUIREMENTS

Electrical Parameters at 25°C			
Inductance +/-2%, @ 6.78 MHz (uH)	DCR +/- 2% (mOhm)	ESR +/- 2% (mOhm)	Quality factor
4.0	235	1450	115

5.0 PRODUCT MECHANICAL AND ENVIRONMENT REQUIREMENTS

ITEM	DESCRIPTION	TEST CONDITION	ACCEPTANCE CRITERIA
5.1	Thermal Cycling Test	• -40°C to 85°C, 23 min dwell, 20°C/min ramp rate,100 cycles. • Verify functionality pre and post-test.	• Parts shall not have any peeling off and damage. • Parts shall meet the electrical requirement before and after test.
5.2	Heat Soak Test	• 65°C/90 % RH Humidity, 168 hrs. • Verify functionality pre and post-test.	• Parts shall not have any peeling off and damage. • Parts shall meet the electrical requirement before and after test.

5.3	Salt Mist	• The device under test is exposed to a spray of a 5%(by volume) resolution of NaCl in water for 48 hours. • Visual inspect the part and verify functionality pre and post-test.	• Parts shall meet the electrical requirement before and after test.

6.0 PACKAGING REQUIREMENT

6.1 Packaging Method

Please refer to Molex packaging drawing for the details at www.molex.com

6.2 Packaging Test

Packaging test method refers to Molex documents of IEP-02 & ES-4000-7001:

ITEM	DESCRIPTION	TEST CONDITION	ACCEPTANCE CRITERIA
3.4.1	Drop Test	➢ Drop height: 120 cm ➢ Packed carton box with full product for sufficient gross weight. ➢ Cycle: 1 Cycle ➢ Angle: Test in each ten (10) angles of the carton box onto the floor	➢ No Permanent Damage Visual / Mechanical ➢ No Appreciable Electrical Degradation Pre / Post Performance
3.4.2	Vibration Test	➢ Test Method: ASTM 5112 or ISO 2247 or ISTA 2A or JIS Z 0200 or equivalent ➢ Start the test machine to vibrate at 25.4 mm / 1 inch total displacement. ➢ The frequency should be 240 cycles per minute and 4.0 Hz with a maximum acceleration ± 10.78 m/s2 (± 1.1 G)	➢ No Permanent Damage Visual / Mechanical ➢ No Appreciable Electrical Degradation Pre / Post Performance

7.0 OTHERS

Store in package or tightly re-closed box with the following conditions:

Temperature: -10°C to +40 °C

Humidity: 15 % to 85 % RH

Check the terminal function before use, if the product has been stored for more than 6 months.

8.0 DEFINITIONS FOR REFERENCE

Equivalent Series Resistance (ESR): resistance measured at or around the operating frequency. ESR accurately characterizes any losses such as skin effect or proximity effect and any additional effects that may occur in the presence of material such as shielding, metal backing, or the housing. Comparison of coil assembly and in situation ESR measurements can accurately determine sources of loss. This metric should be given serious consideration during product selection to ensure full characterization of system electrical parameters.

Direct Current Resistance (DCR): resistance measured at DC or measured at very low frequencies (60 Hz - 100 Hz) and is often considered an incomplete measurement in wireless charging environments because it does not take into account actual causes of resistance during operation. NuCurrent recommends ESR as the most relevant measurement of resistance in a wireless power coil, but provides DCR values as well.

PRODUCT TUNING: To maximize coil and system performance, it is important to optimize the tuning circuit for every application. Improper tuning can lead to inferior system performance even if the individual system blocks, including the coil, comprise high performance components.

The objective of the matching circuit is to resonate the inductive coil (Z_{COIL}) and match it to Z_{IN} (See diagram below). Z_{IN} may be variable; for example when charging a battery, there is a swing in the Z_{LOAD} value which may translate to a swing in Z_{IN}. Instead of optimizing for the full swing in $Z_{IN,}$ a relatively straightforward approach to keep losses low may be to match for maximum efficiency when Z_{IN} is at full load (peak power draw).

A generic tuning/matching network (C1, C2, C3) is provided below as a typical system for wireless charging using magnetic resonance coupling. The topology is a shunt-series-differential-capacitor network. Depending on the application, choice of ICs, effective self-Inductance of the coil (L_{EFF}), and coupling with the transmitter, a derivative topology (e.g. single-ended series, differential series, etc.) may also be implemented.

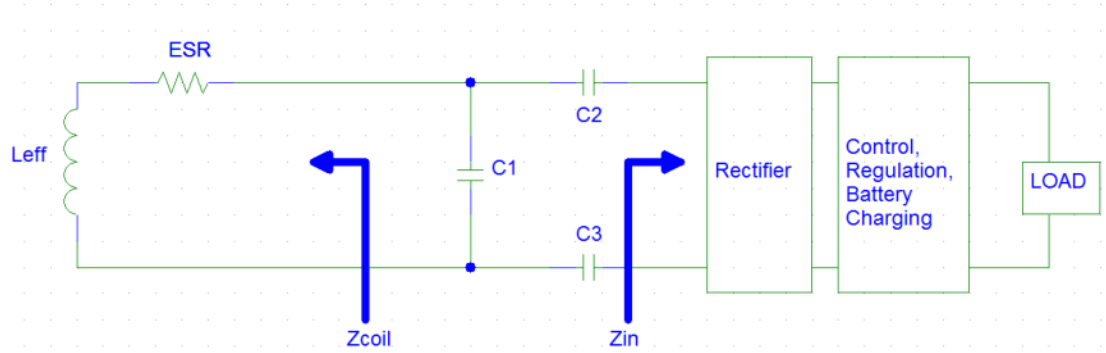

With regards to the capacitor-network, the choice of topology is dependent on the desired $V_{RECTIFIER}$ and the receiver coil selection. A good rule of thumb to determine the **relative** $V_{RECTIFIER}$ between different receive coils is to compute the product L_{EFF} x A_{EFF}, where A_{EFF} is the effective area of the coil. Series tuning is typically preferred for high L_{EFF} coils with good coupling (to the transmitter) to induce a $V_{RECTIFIER}$ within the desired range (typically 7V - 15V for a 4W - 7W receiver). Shunt tuning can be used with very low L_{EFF} coils with low coupling. In general, the shunt helps boost the $V_{RECTIFIER}$. Shunt-series tuning may be used for coils which demonstrate intermediate coupling with the transmitter; this topology also offers more flexibility towards designing for Z_{IN}.

SMT inductors (not shown) may be added in series with C2 and/or C3 to block high frequency harmonics. An EMI filter may also be utilized to prevent harmonics generated at the rectifier stage to re-enter the wireless link.

In order to account for the effect of the environment on the coil, all measurements, including Z_{COIL}, should be performed in-situ, i.e. the coil assembly placed in its intended location in the end application.