NOTES:

1. MATERIALS
   HOUSING - LIQUID CRYSTAL POLYMER (LCP), GLASS FILLED, UL94 V-0;
   COLOR: BLACK
   LATCH - POLYAMIDE (PA), GLASS FILLED, UL94 V-0;
   COLOR: NATURAL (OFF-WHITE)
   TERMINAL - COPPER ALLOY
   PCB HOLD-DOWN FEATURES - COPPER ALLOY
2. FINISHES
   CONTACT AREA - 0.76 MICROMETER (30 MICROINCH) MINIMUM GOLD OVER
   1.25 MICROMETER (50 MICROINCH) MINIMUM NICKEL
   SMT TAIL - 2.54 MICROMETER (100 MICROINCH) MINIMUM TIN OVER
   1.25 MICROMETER (50 MICROINCH) MINIMUM NICKEL
   PCB HOLD-DOWN FEATURES - 2.54 MICROMETER (100 MICROINCH) MINIMUM TIN OVER
   1.25 MICROMETER (50 MICROINCH) MINIMUM NICKEL
3. PRODUCT SPECIFICATION: SEE TABLE
4. PACKAGING SPECIFICATION: SEE TABLE
5. CARD SLOT ACCEPTS 1.40±0.10mm MODULE THICKNESS
   (MEASURED OVER P.C. PADS).
6. MOLEX LOGO, DATE & PART NO. INDICATED ON SIDE OF HOUSING
7. MODULE SEATING PLANE FROM TOP OF PCB.
8. KEEP-OUT ZONE FOR LATCH
9. KEEP-OUT AREA IS THE AREA WHERE THE CONNECTOR IS MOUNTED
   ONTO THE PCB (INCLUDING LATCH IN THE OPEN POSITION).
10. CONNECTOR APPLICATION GUIDELINE: AS-151105-0002.
11. PCB ROUTING RECOMMENDATION: AS-151105-0001.

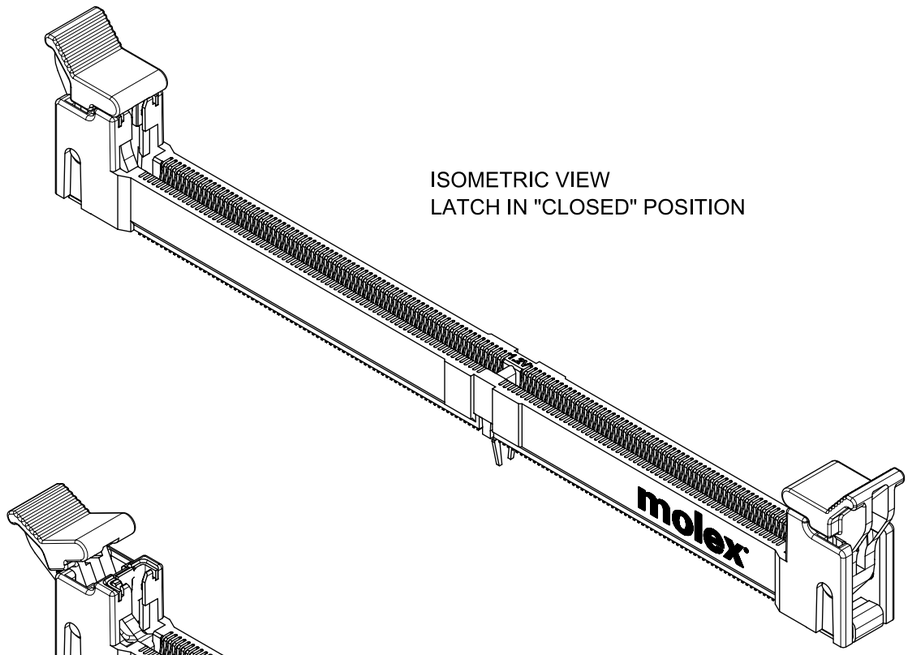

ISOMETRIC VIEW
LATCH IN "CLOSED" POSITION

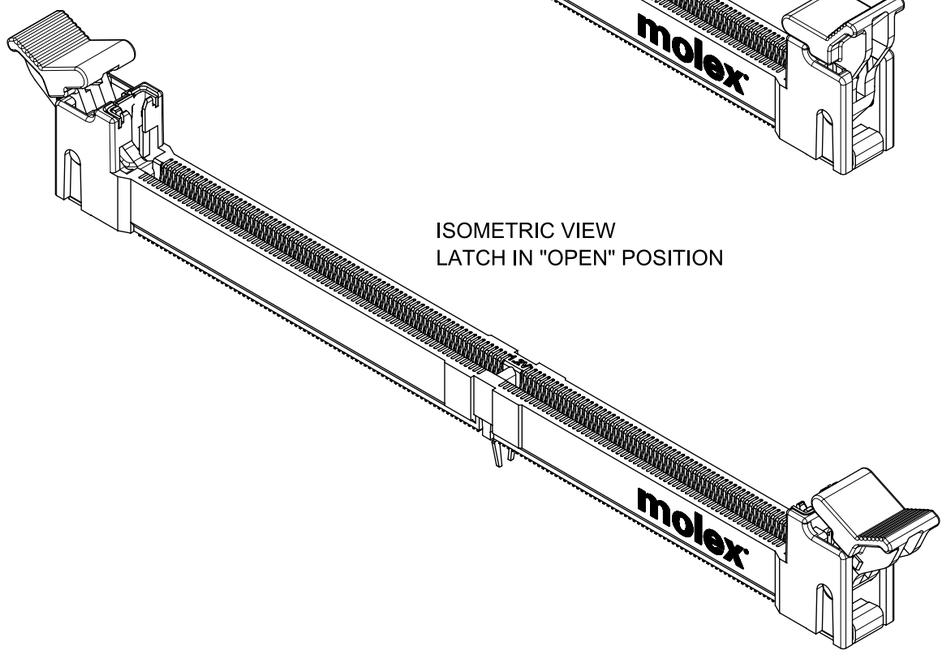

ISOMETRIC VIEW
LATCH IN "OPEN" POSITION

THIS DRAWING CONTAINS INFORMATION THAT IS PROPRIETARY TO MOLEX ELECTRONIC TECHNOLOGIES, LLC AND SHOULD NOT BE USED WITHOUT WRITTEN PERMISSION

DIMENSION UNITS	SCALE
MM	NTS

GENERAL TOLERANCES (UNLESS SPECIFIED)	
ANGULAR TOL	± 3°
4 PLACES	±
3 PLACES	±
2 PLACES	± 0.200
1 PLACE	±
0 PLACES	±

DRAFT WHERE APPLICABLE MUST REMAIN WITHIN DIMENSIONS

CURRENT REV DESC: "REVISED TO CORRECT THE VIEWS IN SHEET 3, 5 AND 6"

STATUS:	Production	
DRWN:	Puneeth S	2024-08-29
CHK'D:	Yogeesh BC	2024-09-03
APPR:	Chetan CV	2024-09-12

molex

DDR4 MINI DIMM, 0.50MM
VERTICAL SMT 288CKTS

PRODUCT CUSTOMER DRAWING

DOCUMENT NUMBER	DOC TYPE	DOC PART	REVISION
SD-151105-0001	PSD	000	C1

THIRD ANGLE PROJECTION	DRAWING	SERIES	MATERIAL NUMBER	CUSTOMER	SHEET NUMBER
	A3-SIZE	151105	SEE TABLE	GENERAL MARKET	1 OF 7

FORMAT: TC-tb-prod-A3
REVISION: B
DATE: 2022/08/01

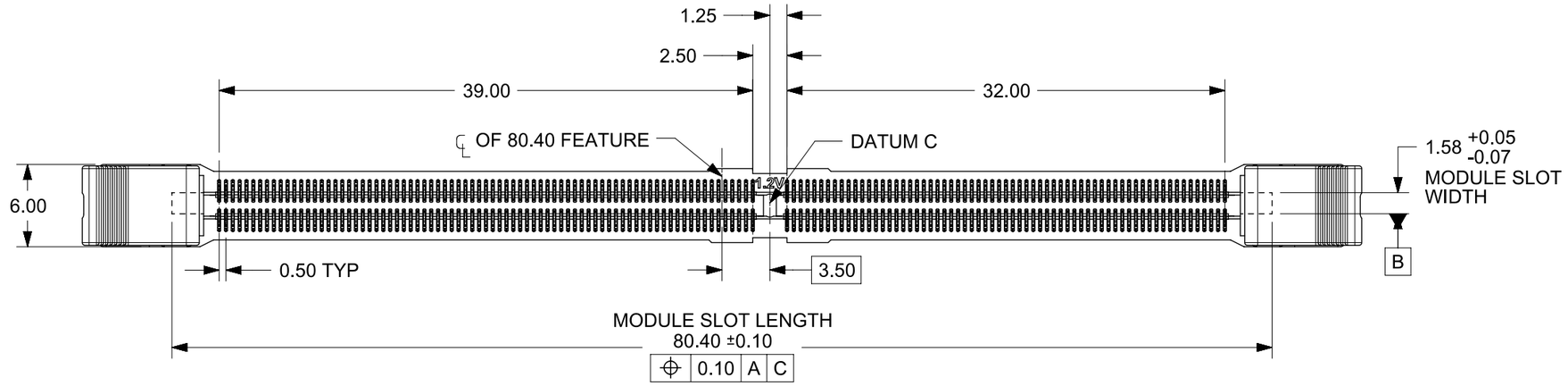

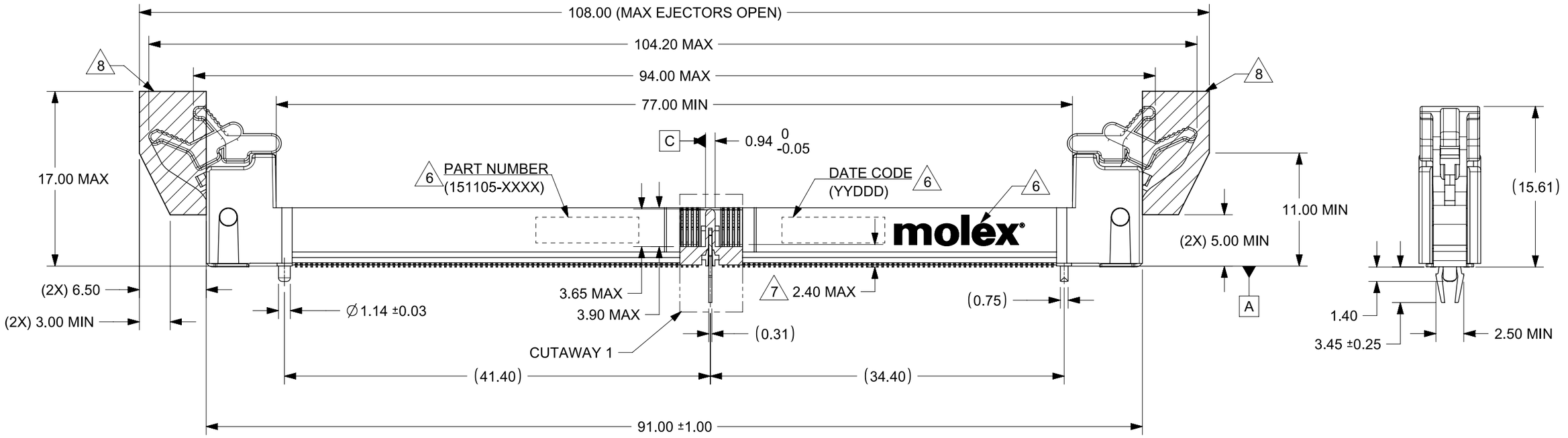

THIS DRAWING CONTAINS INFORMATION THAT IS PROPRIETARY TO MOLEX ELECTRONIC TECHNOLOGIES, LLC AND SHOULD NOT BE USED WITHOUT WRITTEN PERMISSION

DIMENSION UNITS	SCALE
MM	NTS

GENERAL TOLERANCES (UNLESS SPECIFIED)

ANGULAR TOL	± 3°
4 PLACES	±
3 PLACES	±
2 PLACES	± 0.200
1 PLACE	±
0 PLACES	±

DRAFT WHERE APPLICABLE MUST REMAIN WITHIN DIMENSIONS

CURRENT REV DESC: "REVISED TO CORRECT THE VIEWS IN SHEET 3, 5 AND 6"

STATUS: Production

DRWN: Puneeth S	2024-08-29
CHK'D: Yogeesh BC	2024-09-03
APPR: Chetan CV	2024-09-12

molex

DDR4 MINI DIMM, 0.50MM
VERTICAL SMT 288CKTS

PRODUCT CUSTOMER DRAWING

DOCUMENT NUMBER	DOC TYPE	DOC PART	REVISION
SD-151105-0001	PSD	000	C1

THIRD ANGLE PROJECTION	DRAWING	SERIES	MATERIAL NUMBER	CUSTOMER	SHEET NUMBER
	A3-SIZE	151105	SEE TABLE	GENERAL MARKET	2 OF 7

FORMAT: TC-tb-prod-A3
REVISION: B
DATE: 2022/08/01

CONNECTOR WITHOUT CENTER PCB HOLD-DOWN FEATURE

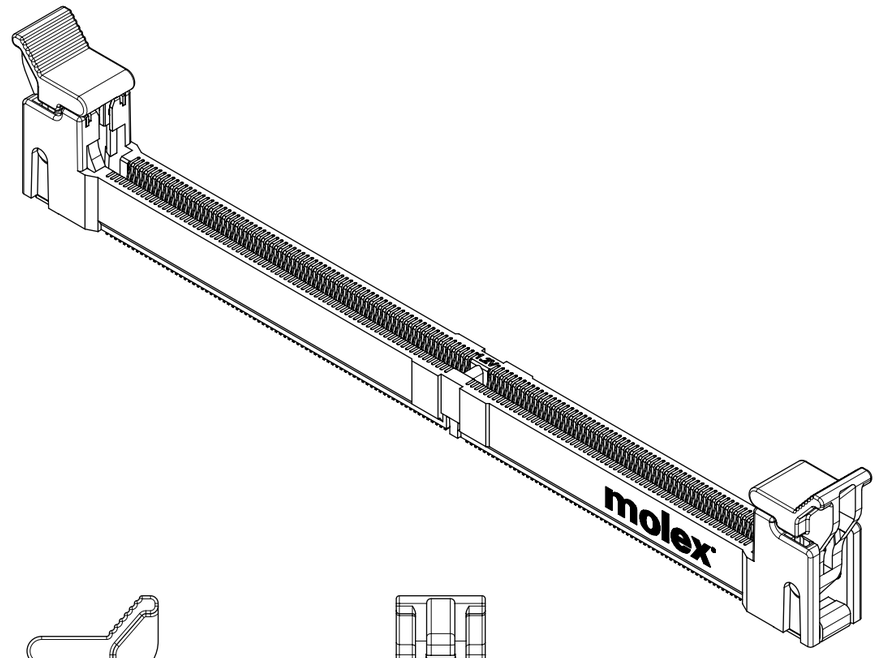

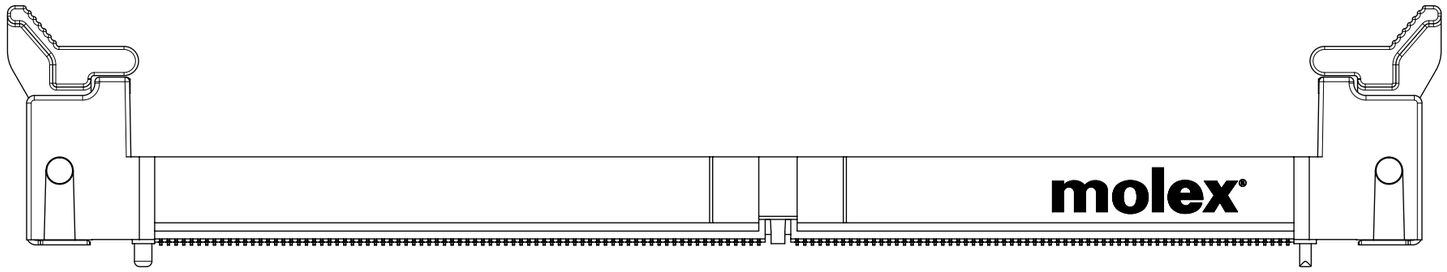

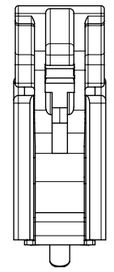

THIS DRAWING CONTAINS INFORMATION THAT IS PROPRIETARY TO MOLEX ELECTRONIC TECHNOLOGIES, LLC AND SHOULD NOT BE USED WITHOUT WRITTEN PERMISSION

DIMENSION UNITS	SCALE
MM	NTS

GENERAL TOLERANCES (UNLESS SPECIFIED)	
ANGULAR TOL	± 3°
4 PLACES	±
3 PLACES	±
2 PLACES	± 0.200
1 PLACE	±
0 PLACES	±

DRAFT WHERE APPLICABLE MUST REMAIN WITHIN DIMENSIONS

CURRENT REV DESC: "REVISED TO CORRECT THE VIEWS IN SHEET 3, 5 AND 6"

STATUS: Production

DRWN:	Puneeth S	2024-08-29
CHK'D:	Yogeesh BC	2024-09-03
APPR:	Chetan CV	2024-09-12

molex

DDR4 MINI DIMM, 0.50MM
VERTICAL SMT 288CKTS

PRODUCT CUSTOMER DRAWING

DOCUMENT NUMBER	DOC TYPE	DOC PART	REVISION
SD-151105-0001	PSD	000	C1

THIRD ANGLE PROJECTION	DRAWING	SERIES	MATERIAL NUMBER	CUSTOMER	SHEET NUMBER
	A3-SIZE	151105	SEE TABLE	GENERAL MARKET	3 OF 7

FORMAT: TC-db-prod-A3
REVISION: B
DATE: 2022/08/01

CONNECTOR WITH PICK & PLACE CAP

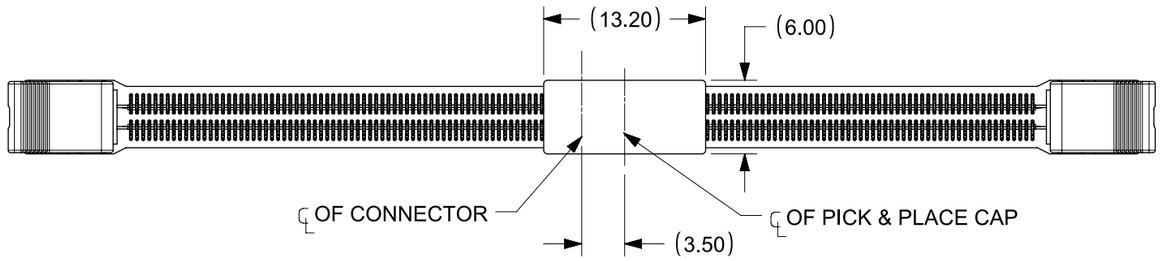

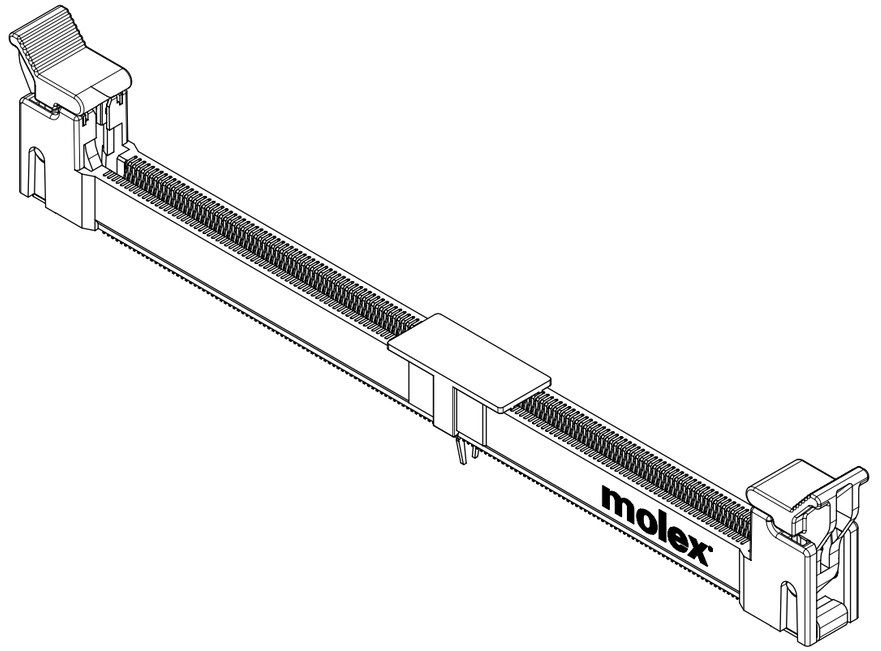

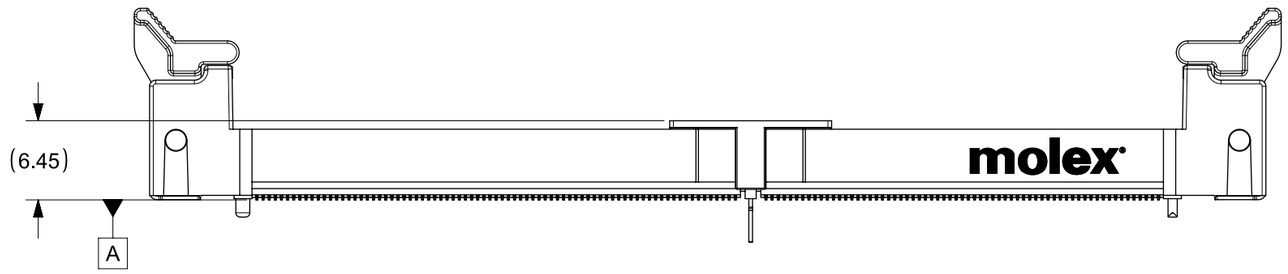

THIS DRAWING CONTAINS INFORMATION THAT IS PROPRIETARY TO MOLEX ELECTRONIC TECHNOLOGIES, LLC AND SHOULD NOT BE USED WITHOUT WRITTEN PERMISSION

DIMENSION UNITS	SCALE
MM	NTS

GENERAL TOLERANCES (UNLESS SPECIFIED)	
ANGULAR TOL	± 3"
4 PLACES	±
3 PLACES	±
2 PLACES	± 0.200
1 PLACE	±
0 PLACES	±

DRAFT WHERE APPLICABLE MUST REMAIN WITHIN DIMENSIONS

CURRENT REV DESC: "REVISED TO CORRECT THE VIEWS IN SHEET 3, 5 AND 6"

STATUS: Production

DRWN:	Puneeth S	2024-08-29
CHK'D:	Yogeesh BC	2024-09-03
APPR:	Chetan CV	2024-09-12

molex

DDR4 MINI DIMM, 0.50MM
VERTICAL SMT 288CKTS

PRODUCT CUSTOMER DRAWING

DOCUMENT NUMBER	DOC TYPE	DOC PART	REVISION
SD-151105-0001	PSD	000	C1

THIRD ANGLE PROJECTION	DRAWING	SERIES	MATERIAL NUMBER	CUSTOMER	SHEET NUMBER
	A3-SIZE	151105	SEE TABLE	GENERAL MARKET	4 OF 7

FORMAT: TC-tb-prod-A3
REVISION: B
DATE: 2022/08/01

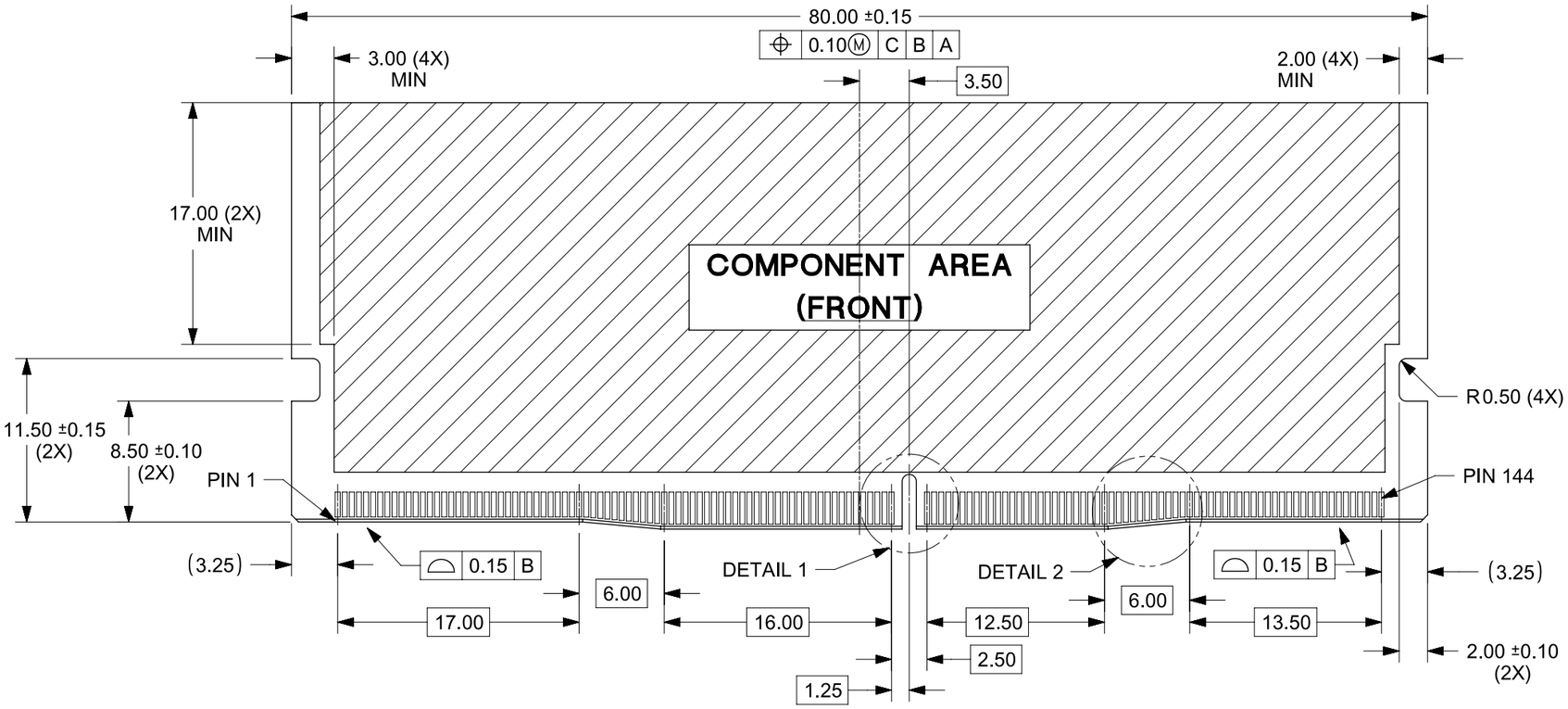

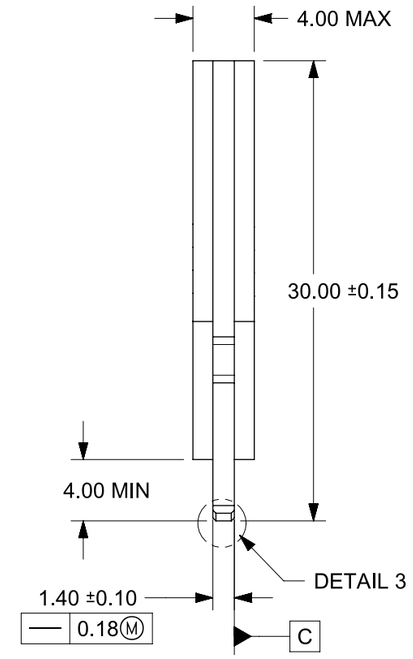

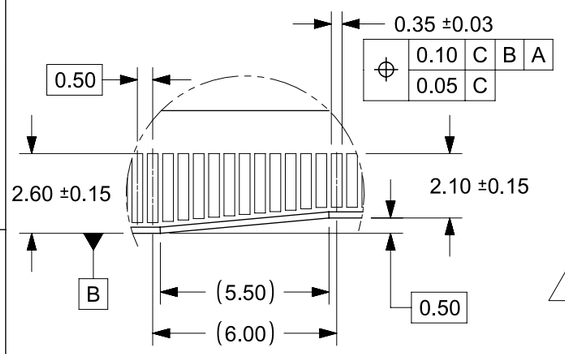

DETAIL 2

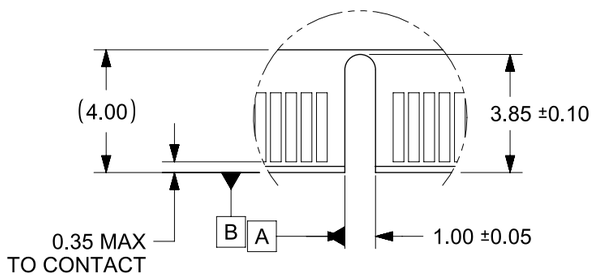

DETAIL 1

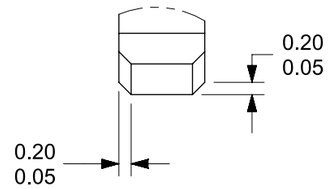

DETAIL 3

NOTE:
1. CHAMFERS AND/OR RADII AS DEFINED BY JEDEC SOLID STATE PRODUCT OUTLINE

THIS DRAWING CONTAINS INFORMATION THAT IS PROPRIETARY TO MOLEX ELECTRONIC TECHNOLOGIES, LLC AND SHOULD NOT BE USED WITHOUT WRITTEN PERMISSION

DIMENSION UNITS	MM
SCALE	NTS
GENERAL TOLERANCES (UNLESS SPECIFIED)	
ANGULAR TOL	± 3"
4 PLACES	±
3 PLACES	±
2 PLACES	± 0.200
1 PLACE	±
0 PLACES	±
DRAFT WHERE APPLICABLE MUST REMAIN WITHIN DIMENSIONS	

CURRENT REV DESC: "REVISED TO CORRECT THE VIEWS IN SHEET 3, 5 AND 6"

STATUS: Production

DRWN:	Puneeth S	2024-08-29
CHK'D:	Yogeesh BC	2024-09-03
APPR:	Chetan CV	2024-09-12

molex

DDR4 MINI DIMM, 0.50MM VERTICAL SMT 288CKTS

PRODUCT CUSTOMER DRAWING

DOCUMENT NUMBER	DOC TYPE	DOC PART	REVISION
SD-151105-0001	PSD	000	C1

THIRD ANGLE PROJECTION	DRAWING	SERIES	MATERIAL NUMBER	CUSTOMER	SHEET NUMBER
	A3-SIZE	151105	SEE TABLE	GENERAL MARKET	5 OF 7

FORMAT: TC-dc-prod-A3
REVISION: B
DATE: 2022/08/01

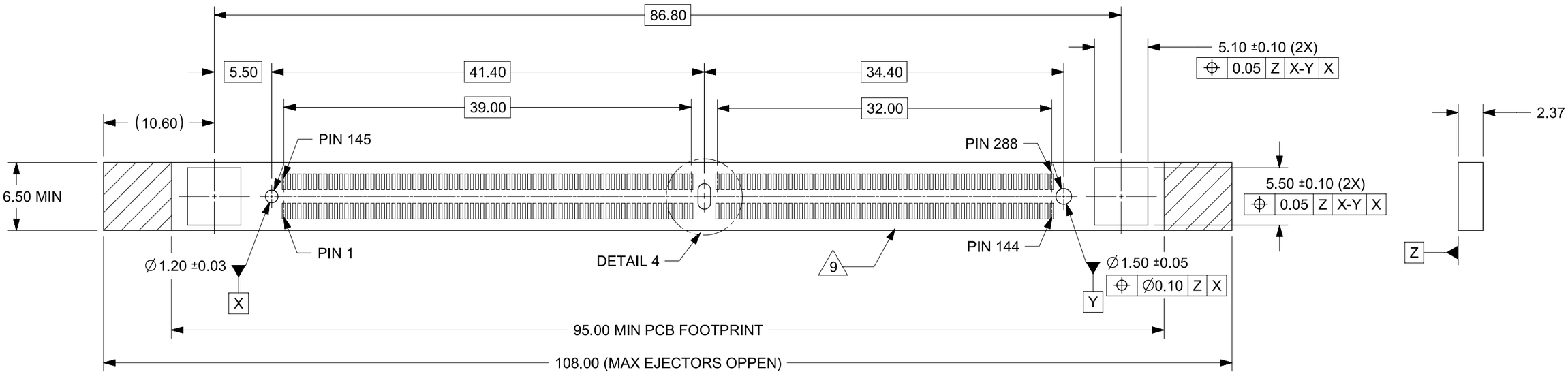

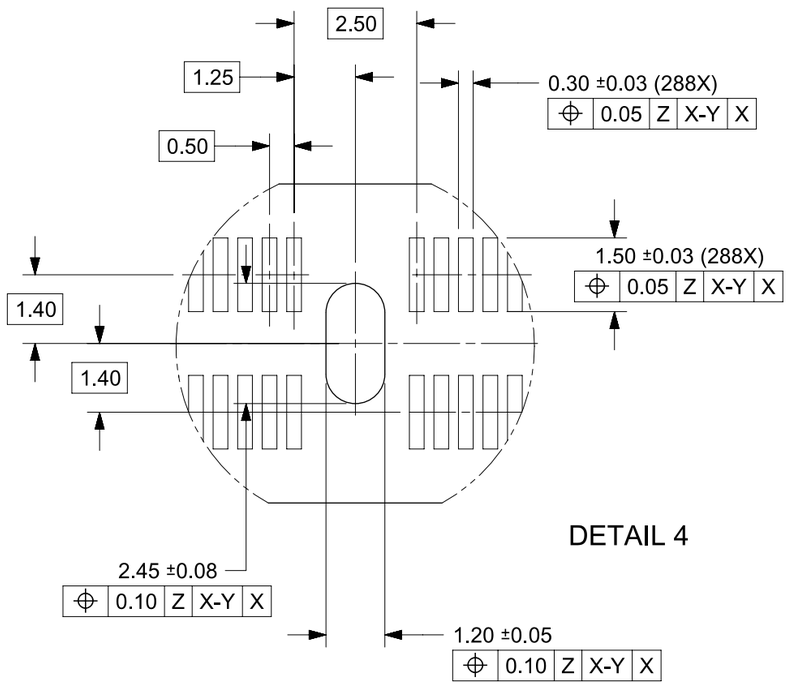

DETAIL 4

THIS DRAWING CONTAINS INFORMATION THAT IS PROPRIETARY TO MOLEX ELECTRONIC TECHNOLOGIES, LLC AND SHOULD NOT BE USED WITHOUT WRITTEN PERMISSION

DIMENSION UNITS	SCALE
MM	NTS

GENERAL TOLERANCES (UNLESS SPECIFIED)

ANGULAR TOL	± 3"
4 PLACES	±
3 PLACES	±
2 PLACES	± 0.200
1 PLACE	±
0 PLACES	±

DRAFT WHERE APPLICABLE MUST REMAIN WITHIN DIMENSIONS

CURRENT REV DESC: "REVISED TO CORRECT THE VIEWS IN SHEET 3, 5 AND 6"

STATUS: Production

DRWN: Puneeth S 2024-08-29

CHK'D: Yogeesh BC 2024-09-03

APPR: Chetan CV 2024-09-12

molex

DDR4 MINI DIMM, 0.50MM
VERTICAL SMT 288CKTS

PRODUCT CUSTOMER DRAWING

DOCUMENT NUMBER	DOC TYPE	DOC PART	REVISION
SD-151105-0001	PSD	000	C1

THIRD ANGLE PROJECTION	DRAWING	SERIES	MATERIAL NUMBER	CUSTOMER	SHEET NUMBER
	A3-SIZE	151105	SEE TABLE	GENERAL MARKET	6 OF 7

FORMAT: TC-tb-prod-A3
REVISION: B
DATE: 2022/08/01

ASSEMBLY PART NUMBER	CENTER PCB HOLD-DOWN FEATURE	PICK & PLACE CAP	PRODUCT SPECIFICATION	PACKAGING SPECIFICATION
151105-0001	YES	NO	PS-151105-0001	PK-151105-0001
151105-0002	NO	YES		
151105-0003	YES	YES		
151105-0004	NO	NO		

THIS DRAWING CONTAINS INFORMATION THAT IS PROPRIETARY TO MOLEX ELECTRONIC TECHNOLOGIES, LLC AND SHOULD NOT BE USED WITHOUT WRITTEN PERMISSION

DIMENSION UNITS	SCALE
MM	NTS

GENERAL TOLERANCES (UNLESS SPECIFIED)	
ANGULAR TOL	± 3"
4 PLACES	±
3 PLACES	±
2 PLACES	± 0.200
1 PLACE	±
0 PLACES	±

DRAFT WHERE APPLICABLE MUST REMAIN WITHIN DIMENSIONS

CURRENT REV DESC: "REVISED TO CORRECT THE VIEWS IN SHEET 3, 5 AND 6"

STATUS: Production
DRWN: Puneeth S 2024-08-29
CHK'D: Yogeesh BC 2024-09-03
APPR: Chetan CV 2024-09-12

THIRD ANGLE PROJECTION | DRAWING: A3-SIZE | SERIES: 151105

molex

DDR4 MINI DIMM, 0.50MM
VERTICAL SMT 288CKTS

PRODUCT CUSTOMER DRAWING

DOCUMENT NUMBER	DOC TYPE	DOC PART	REVISION
SD-151105-0001	PSD	000	C1

MATERIAL NUMBER	CUSTOMER	SHEET NUMBER
SEE TABLE	GENERAL MARKET	7 OF 7

FORMAT: TC-tb-prod-A3
REVISION: B
DATE: 2022/08/01