Series ML-100
Mini-Link™ Miniature Jumpers

FEATURES:
- Mini-Link™ miniature jumpers are useful for jumpering .025 [.63] square pins on .100 [2.54] centers.
- Used to jumper from row-to-row or from pin-to-pin.
- Their miniature size makes it possible to st ack one on top of the other.
- A convenient test probe slot is provided as well.
- Mini-Links™ are available from the factory with or without a handle, used for ease of inserting or extracting.
- Sold in multiples of 50.

SPECIFICATIONS:
- Body material is black UL 94V-0 Glass-filled 4/6 Nylon.
- Contacts are Beryllium Copper Alloy 174, spring tempered, per ASTM B768.
- Standard contact plating is 20µ [.51µm] Gold per MIL-G-45204 over 50µ [1.27µm] min. Nickel per SAE-AMS-QQ-N-290.
- Current rating=3 Amps.
- Operating temperature= -67°F to 257°F [-55°C to 125°C]
- Insertion Force=210 ± 40 grams/pin.
- Withdrawal Force=180 ± 40 grams/pin.
- Minimum insertion depth=.075 [1.91].



Note: Aries specializes in custom design and production. In addition to the standard products shown on this page, special materials, platings, sizes, and configurations can be furnished, depending on quantities. Aries reserves the right to change product specifications without notice.

ORDERING INFORMATION

Part Number	Plating	Handle
ML-100	GOLD	YES
ML-100S	GOLD	NO

ALL DIMENSIONS: INCHES [MILLIMETERS]

All tolerances ± .005 [.13] unless otherwise specified

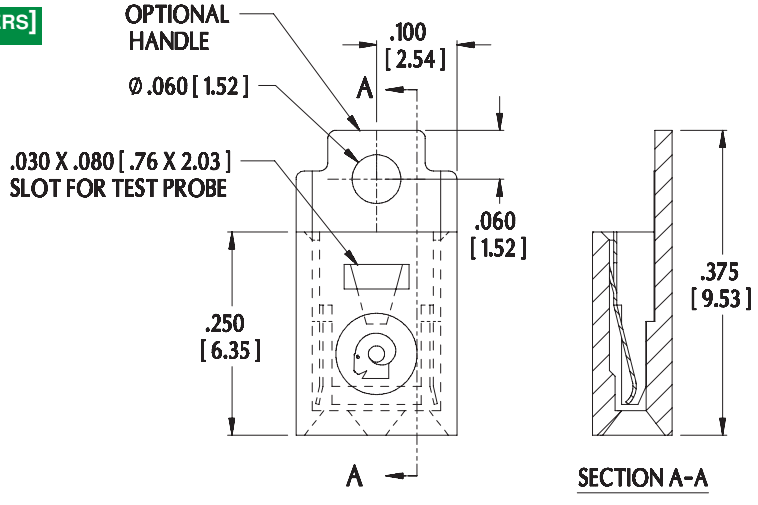

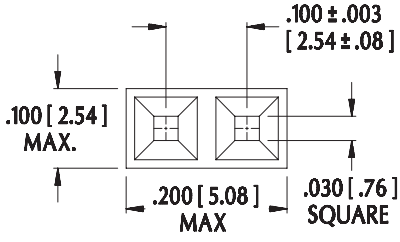

ARIES ELECTRONICS, INC.
http://www.arieselec.com • info@arieselec.com
Bristol, PA USA
TEL: (215) 781-9956
FAX: (215) 781-9845

RoHS Compliant

PRINTOUTS OF THIS DOCUMENT MAY BE OUT OF DATE AND SHOULD BE CONSIDERED UNCONTROLLED