SPECIFICATIONS

(RoHS Compliant)

Model Number: SDD24K1E2X-E3 Version: 00

Part Number: 17001142A Jun 12, 2018

Mechanical Drawing:

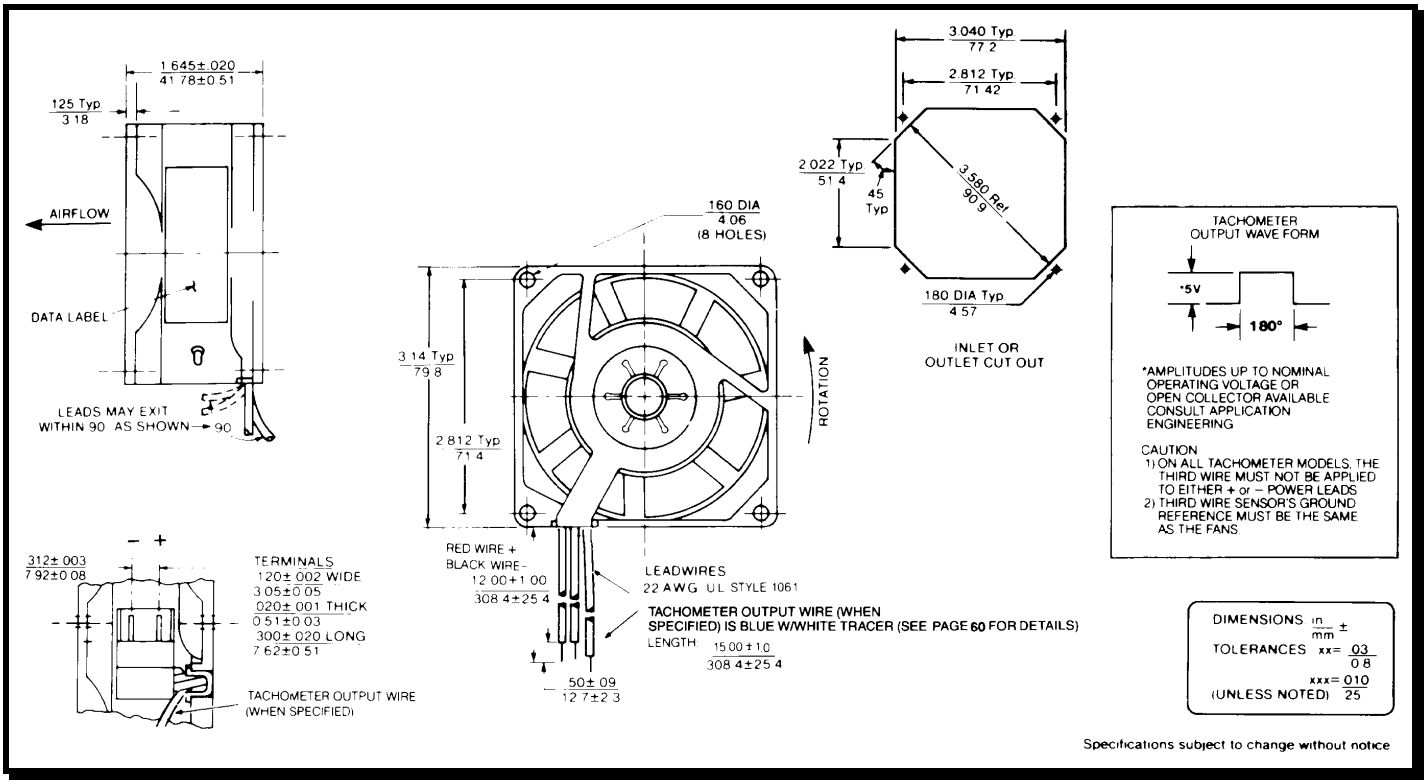

Motor:

Nominal Voltage	= 24 vdc
Operating Voltage Range	= 16 – 32vdc
Nominal Running Current	= 0.220 amps
Locked Rotor Current	= 0.70 amps
Running Power	= 5.2 watts
Average Speed	= 4200
Bearings	= Ball
Air Flow	= 43 CFM
Acoustic	= 52.1 dBA

Construction:

Venturi: Single Piece Die-Cast Zinc Alloy, Black
Propeller: Plastic, Black, UL 94V-0

Life Expectancy:

This fan is designed for continuous duty life of 52,000 hours at 70°C.

Termination:

12”±1”(304.8±25.4mm) 22AWG UL1061 Leadwires
Red = Power(+)
Black = Return(-)
Blue/White = Tach output
Yellow = PWM control

Additional Features:

Brushless DC Motor
Automatic Restart Capability
Electronic Locked Rotor Protection
Polarity Protected

Operating Temperature:	-10°C to 70°C
Storage Temperature:	-40°C to 85°C
Environmental Protection:	Type 3(IP68)

TACHOMETER:

Output: Open Collector
Ic: 20 mA max.
Vcc: 32 Vdc max.
Pulses per Revolution: 2
Isolated: No

Speed Control:

PWM: 200 ~ 2 KHz, Open Collector
<10% Duty: Off
10%~95% Duty: Linear Ramp
>95% Duty or Open Lead Wire: Full Speed

Agencies:

UL, CUL, CE

PQ Curve:

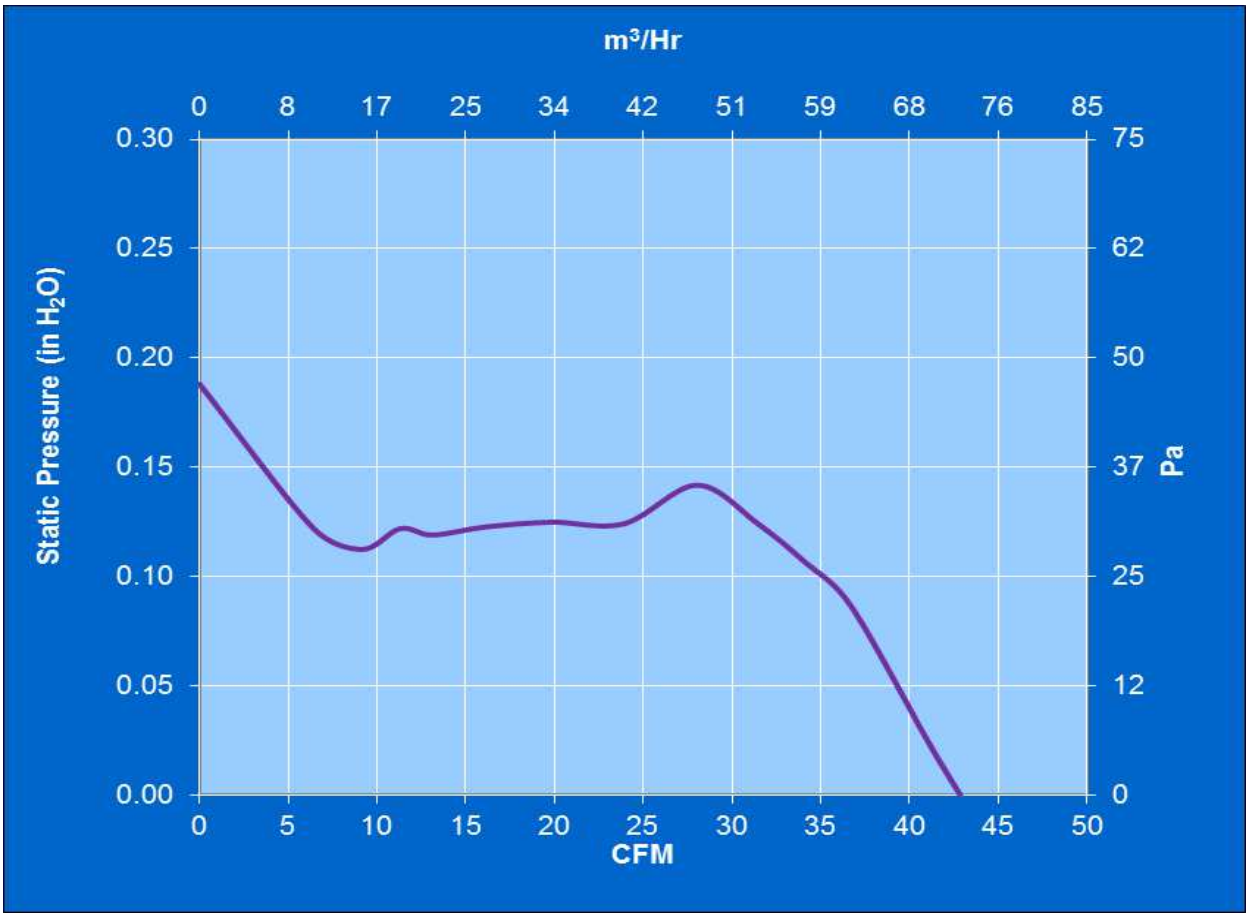
m³/Hr
0
8
17
25
34
42
51
59
68
76
85
0.30
0.25
0.20
0.15
0.10
0.05
0.00
Static Pressure (in H2O)
75
62
50
37
25
12
0
Pa
0
5
10
15
20
25
30
35
40
45
50
CFM